SIDE VIEW

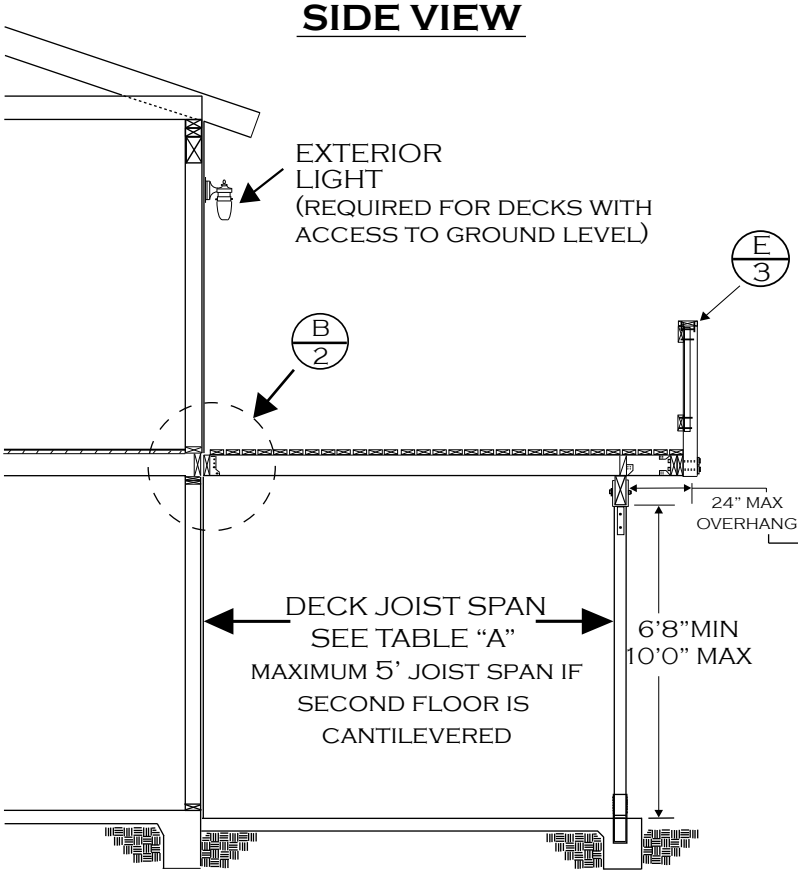

FRONT VIEW

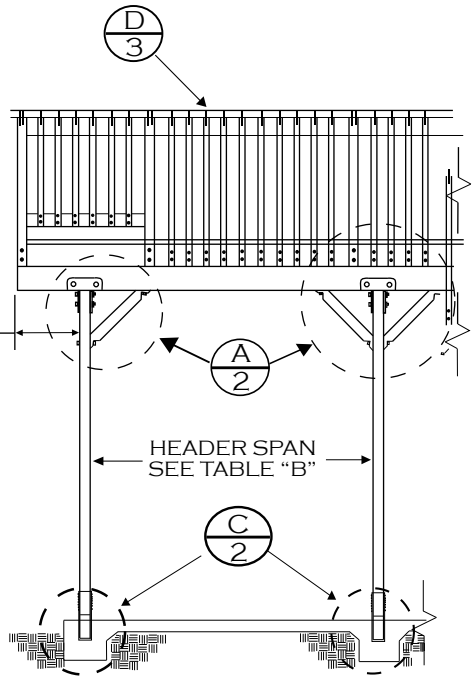

NOTES: SEE LAST TWO PAGES FOR UPDATE OF REQUIRED DECK LATERAL LOAD CONNECTION PER 2010 CRC SECTION R502.2.2.3

1. ALL LUMBER SHALL BE DOUGLAS FIR #2 GRADE OR BETTER
2. LEDGER BOLTS SHALL BE 1/2'' DIAMETER BY 5" LONG. BOLTS ARE TO BE STAGGERED.
3. USE OF THIS STANDARD IS LIMITED TO R-3 OCCUPANCIES (SINGLE-FAMILY DWELLINGS AND DUPLEX)

TABLE "A"

DECK JOIST SPAN		
SIZE	SPACING	SPAN
2 X 6	12" o.c.	10'9''
	16" o.c.	9'9''
	24" o.c.	8'1''
2 X 8	12" o.c.	14'2''
	16" o.c.	12'7''
	24" o.c.	10'3''
2 X 10	16" o.c.	15'5''
	24" o.c.	12'7''
2 X 12	24" o.c.	14'7''
4 X 6	12" o.c.	16'0"
	16" o.c.	14'0"
	24" o.c.	11'5"
4 X 8	24" o.c.	15'0"
4 X 10	32" o.c.	15'0"

TABLE "B"

JOIST SPAN	HEADER SPAN	MINIMUM HEADER SIZE	MINIMUM FOOTING SIZE
UP TO 16'	UP TO 6'	4 X 8	18" SQ. X 18" DEEP
UP TO 8'	UP TO 8'	4 X 8	18" SQ. X 18" DEEP
UP TO 16'	UP TO 8'	4 X 10	21''SQ. X 18" DEEP
UP TO 8'	UP TO 10'	4 X 10	23'' SQ. X 18" DEEP
UP TO 14'	UP TO 10'	4 X 12	26'' SQ. X 18" DEEP
UP TO 10'	UP TO 12'	6 X 10	26'' SQ. X 18" DEEP
UP TO 12'	UP TO 14'	6 X 12	28'' SQ. X 18" DEEP

TABLE "C"

JOIST SPAN	BOLT SPACING 1/2" DIA 5" LONG
UP TO 8'	8" o.c.
UP TO 10'	7" o.c.
UP TO 12'	6" o.c.
UP TO 14'	5" o.c.
UP TO 16'	4" o.c.

BUILDING DIVISION
ATTACHED
BALCONY/DECK STANDARD
FOR SINGLE FAMILY DWELLINGS
BASED ON 2010 CALIFORNIA RESIDENTIAL CODE

(760) 435-3950
300 N. COAST HIGHWAY, OCEANSIDE, CA. 92054
FAX: (760) 435-3926

06/25/12

KNEE BRACE DETAIL (A)

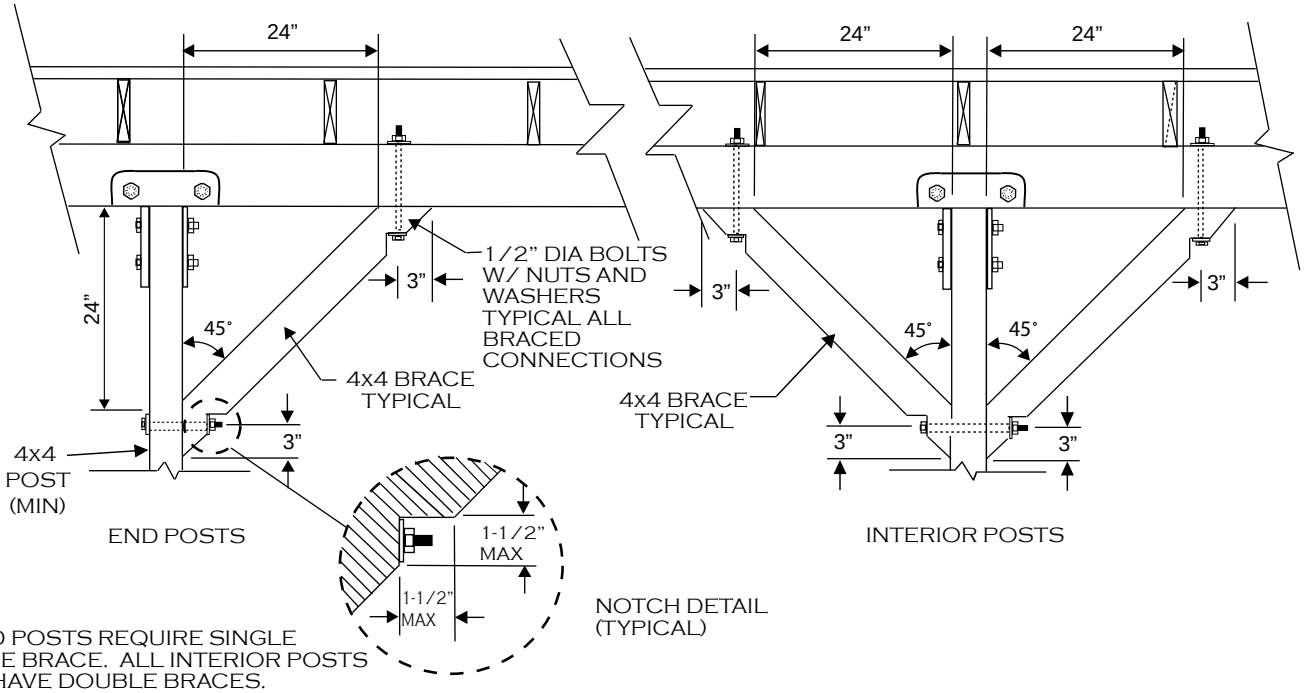

NOTE:
1. END POSTS REQUIRE SINGLE KNEE BRACE. ALL INTERIOR POSTS TO HAVE DOUBLE BRACES.

LEDGER DETAIL (B)

Deck lateral load connection also required per the 2010 CRC section R502.2.2.3 see pages 5 & 6

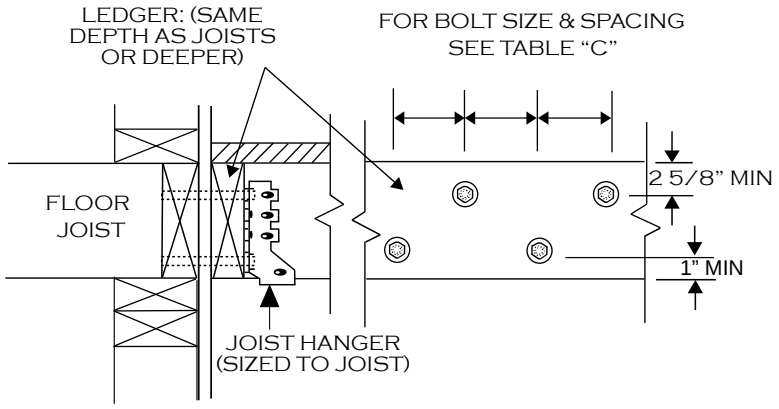

SECTION VIEW **FRONT VIEW**

NOTE: THIS DECK CONNECTION DETAIL IS BASED ON THE ASSUMPTION THAT A MINIMUM 1-1/2” THICK WOOD MEMBER IS ADEQUATELY INSTALLED AT ALL EDGES OF THE 2ND FLOOR DIAPHRAGM. IF ANY OTHER MATERIAL IS USED, SUCH AS TJI JOISTS, A SPECIAL ENGINEERED DESIGN WILL BE REQUIRED. IT IS THE OWNER’S RESPONSIBILITY TO VERIFY THE PRESENCE OF THE APPROPRIATE RIM JOIST.

FOOTING DETAIL (C)

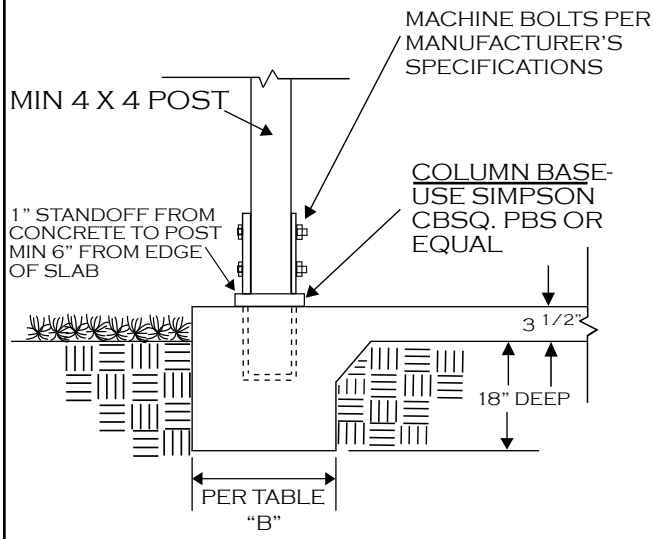

(760) 435-3950	**BUILDING DIVISION** **BALCONY/DECK STANDARD** FOR SINGLE FAMILY DWELLINGS Based on 2010 California Residential Code 300 N Coast Highway, Oceanside, CA 92054		
Fax: (760) 435-3926	06/25/12		2 of 6

RAILING, POST & BEAM DETAIL (D)

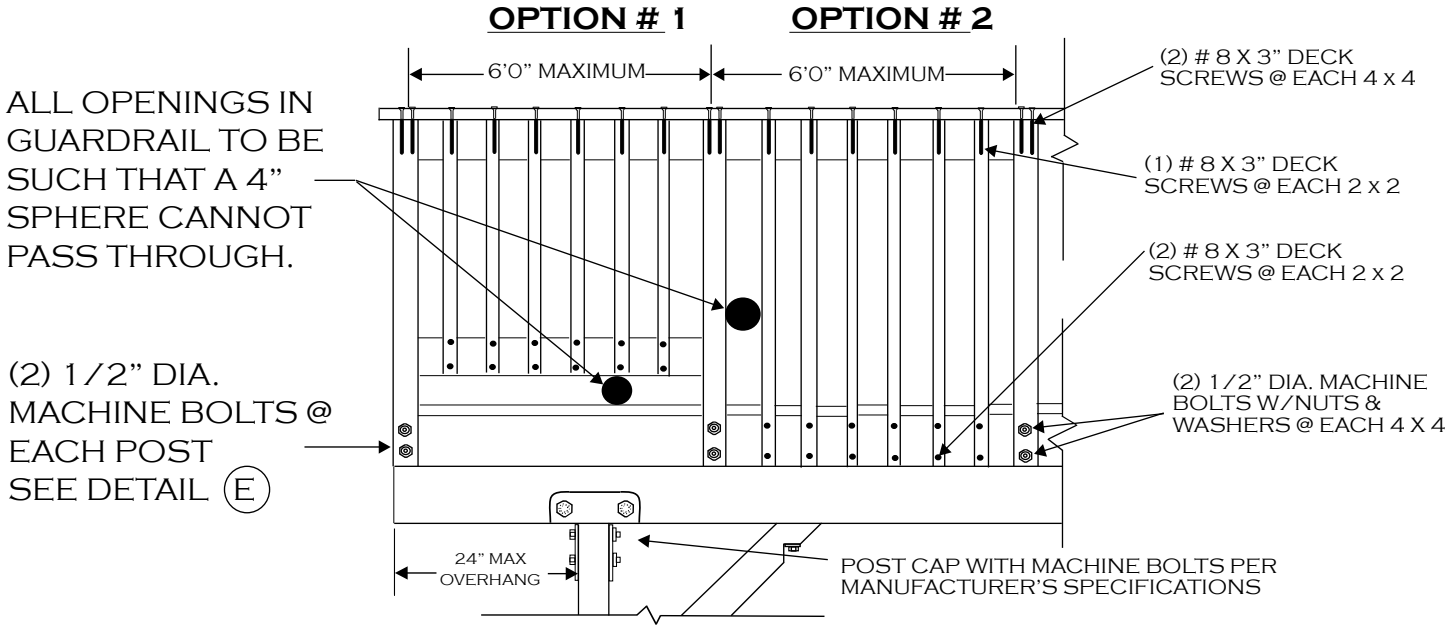

RAILING SECTION VIEWS (E)

GUARDRAIL PERPENDICULAR TO JOISTS ATTACHED

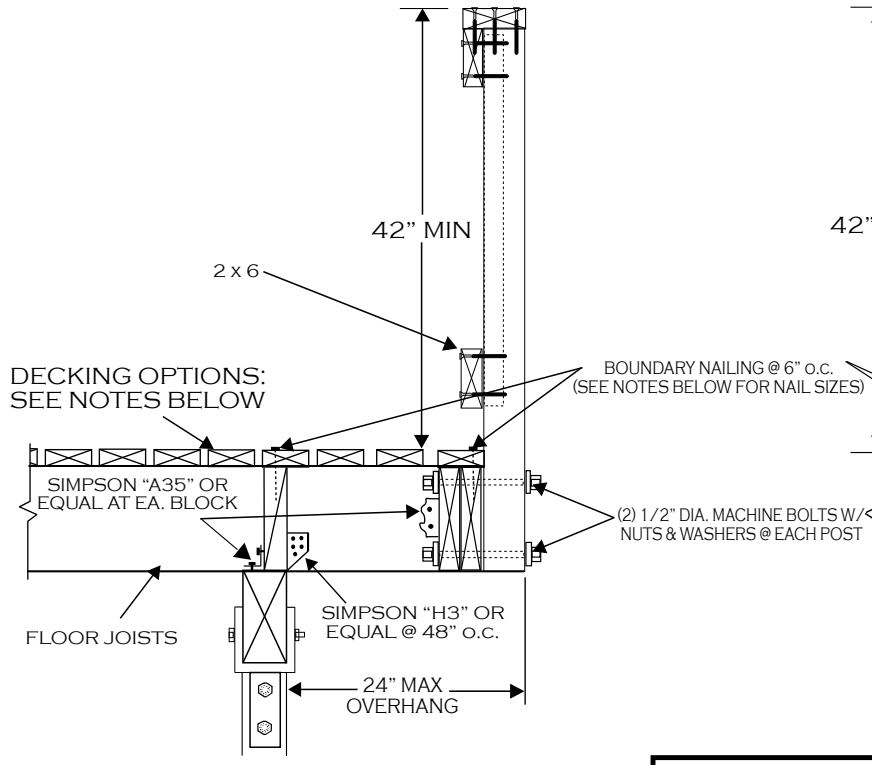

GUARDRAIL PARALLEL TO JOISTS

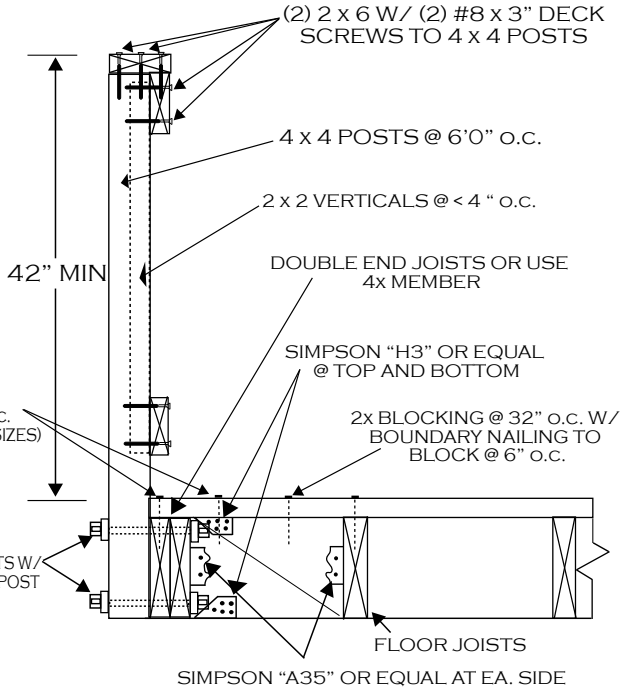

NOTE: DECKING OPTIONS ARE AS FOLLOWS:

1. 5/8" TONGUE AND GROOVE JOINTED PLYWOOD SECURED WITH 8D NAILS. ALL EDGE NAILING AT 6" O.C. MUST BE COVERED WITH AN APPROVED WEATHER RESISTIVE MATERIAL WALKING SURFACE AND SLOPED FOR DRAINAGE.

2. 2 x 6" DECKING SECURED W/ (2) 16D NAILS @ EA. JOIST.

CITY OF OCEANSIDE INCORPORATED 1888	**BUILDING DIVISION ATTACHED BALCONY/DECK STANDARD** FOR SINGLE FAMILY DWELLINGS BASED ON 2010 CALIFORNIA RESIDENTIAL CODE		
(760) 435-3950	300 N COAST HIGHWAY, OCEANSIDE, CA 92054		
FAX: (760) 435-3926	06/25/12		3 OF 6

OPTIONAL EXTERIOR STAIRWAY

NOTES:

1. THE TOLERANCE BETWEEN THE LARGEST AND SMALLEST TREAD DEPTH OR BETWEEN THE LARGEST AND SMALLEST RISER HEIGHT SHALL NOT EXCEED 3/8" IN THE STAIRWAY.
2. STAIRWAY WIDTH 36" MIN
3. TREADS MUST HAVE APPROVED SLIP RESISTANT SURFACE.
4. ALTERNATE STAIRWAY DESIGNS MAY BE ACCEPTABLE PENDING BUILDING DIVISION APPROVAL.
5. LIGHTING LEVEL AT ALL STAIR TREADS TO BE A MINIMUM OF 1 FOOT-CANDLE.

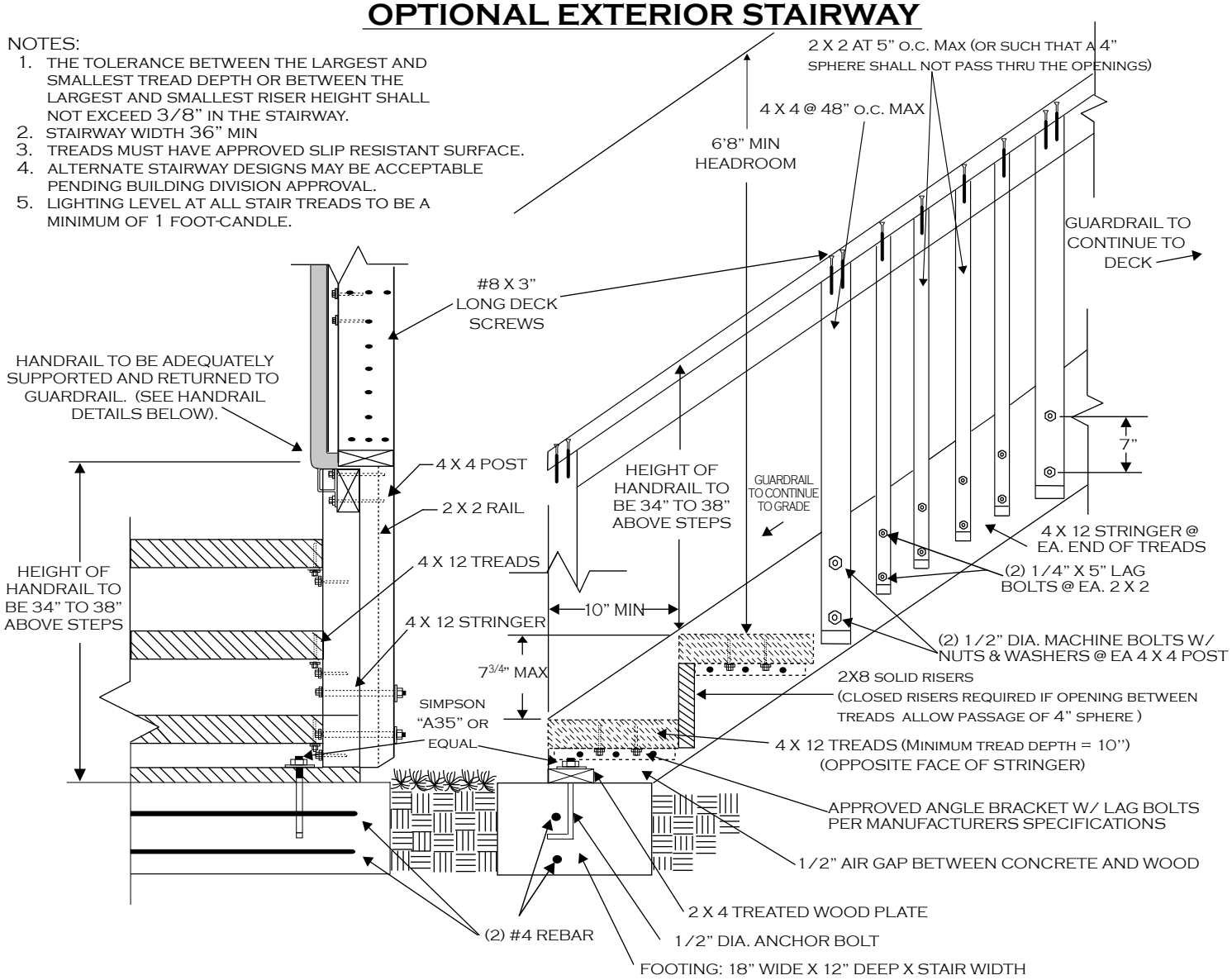

FRONT VIEW **SIDE VIEW**

HANDRAIL DETAILS

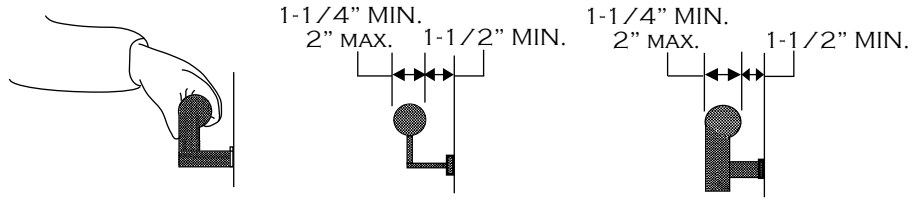

NOTE: OTHER SHAPES MAY BE ACCEPTABLE IF THEY PROVIDE AN EQUIVALENT GRIPPING SURFACE.

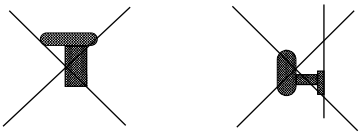

THESE DESIGNS ARE NOT ACCEPTABLE

	BUILDING DIVISION ATTACHED BALCONY/DECK STANDARD FOR SINGLE FAMILY DWELLINGS BASED ON 2010 CALIFORNIA RESIDENTIAL CODE
(760) 435-3950	300 N COAST HIGHWAY, OCEANSIDE, CA 92054
FAX: (760) 435-3926	06/25/12 — 4 OF 6

CHAPTER 5
FLOORS

SECTION R501
GENERAL

R501.1 Application. The provisions of this chapter shall control the design and construction of the floors for all buildings including the floors of *attic* spaces used to house mechanical or plumbing fixtures and *equipment*.

R501.2 Requirements. Floor construction shall be capable of accommodating all loads according to Section R301 and of transmitting the resulting loads to the supporting structural elements.

SECTION R502
WOOD FLOOR FRAMING

R502.1 Identification. Load-bearing dimension lumber for joists, beams and girders shall be identified by a grade *mark* of a lumber grading or inspection agency that has been *approved* by an accreditation body that complies with DOC PS 20. In lieu of a grade *mark*, a certificate of inspection issued by a lumber grading or inspection agency meeting the requirements of this section shall be accepted.

Note: See Section R301.1.1.1 for limited-density owner-built rural dwellings.

R502.1.1 Preservative-treated lumber. Preservative treated dimension lumber shall also be identified as required by Section R319.1.

R502.1.2 Blocking and subflooring. Blocking shall be a minimum of utility grade lumber. Subflooring may be a minimum of utility grade lumber or No. 4 common grade boards.

R502.1.3 End-jointed lumber. *Approved* end-jointed lumber identified by a grade *mark* conforming to Section R502.1 may be used interchangeably with solid-sawn members of the same species and grade.

R502.1.4 Prefabricated wood I-joists. Structural capacities and design provisions for prefabricated wood I-joists shall be established and monitored in accordance with ASTM D 5055.

R502.1.5 Structural glued laminated timbers. Glued laminated timbers shall be manufactured and identified as required in ANSI/AITC A190.1 and ASTM D 3737.

R502.1.6 Structural log members. Stress grading of structural log members of nonrectangular shape, as typically used in log buildings, shall be in accordance with ASTM D 3957. Such structural log members shall be identified by the grade *mark* of an *approved* lumber grading or inspection agency. In lieu of a grade *mark* on the material, a certificate of inspection as to species and grade issued by a lumber-grading or inspection agency meeting the requirements of this section shall be permitted to be accepted.

R502.1.7 Exterior wood/plastic composite deck boards. Wood/plastic composites used in exterior deck boards shall comply with the provisions of Section R317.4.

R502.2 Design and construction. Floors shall be designed and constructed in accordance with the provisions of this chapter, Figure R502.2 and Sections R317 and R318 or in accordance with AF&PA/NDS.

R502.2.1 Framing at braced wall lines. A load path for lateral forces shall be provided between floor framing and *braced wall panels* located above or below a floor, as specified in Section R602.10.6.

R502.2.2 Decks. Where supported by attachment to an exterior wall, decks shall be positively anchored to the primary structure and designed for both vertical and lateral loads as applicable. Such attachment shall not be accomplished by the use of toenails or nails subject to withdrawal. Where positive connection to the primary building structure cannot be verified during inspection, decks shall be self- supporting. For decks with cantilevered framing members, connections to exterior walls or other framing members, shall be designed and constructed to resist uplift resulting from the full live load specified in Table R301.5 acting on the cantilevered portion of the deck.

R502.2.2.1 Deck ledger connection to band joist. For decks supporting a total design load of 50 pounds per square foot (2394 Pa) [40 pounds per square foot (1915 Pa) live load plus 10 pounds per square foot (479 Pa) dead load], the connection between a deck ledger of pressure-preservative-treated Southern Pine, incised pressure-preservative-treated Hem-Fir or *approved* decay- resistant species, and a 2-inch (51 mm) nominal lumber band joist bearing on a sill plate or wall plate shall be constructed with $^1/_2$-inch (12.7 m) lag screws or bolts with washers in accordance with Table R502.2.2.1. Lag screws, bolts and washers shall be hot-dipped galvanized or stainless steel.

R502.2.2.1.1 Placement of lag screws or bolts in deck ledgers. The lag screws or bolts shall be placed 2 inches (51 mm) in from the bottom or top of the deck ledgers and between 2 and 5 inches (51 and 127 mm) in from the ends. The lag screws or bolts shall be staggered from the top to the bottom along the horizontal run of the deck ledger.

R502.2.2.2 Alternate deck ledger connections. Deck ledger connections not conforming to Table R502.2.2.1 shall be designed in accordance with accepted engineering practice. Girders supporting deck joists shall not be supported on deck ledgers or band joists. Deck ledgers shall not be supported on stone or masonry veneer.

R502.2.2.3 Deck lateral load connection. The lateral load connection required by Section R502.2.2 shall be permitted to be in accordance with Figure R502.2.2.3. Hold-down tension devices shall be installed in not less than two locations per deck, and each device shall have an allowable stress design capacity of not less than 1500 pounds (6672 N).

TABLE R502.2.2.1
FASTENER SPACING FOR A SOUTHERN PINE OR HEM-FIR DECK LEDGER AND A 2-INCH NOMINAL SOLID-SAWN SPRUCE-PINE-FIR BAND JOIST[c, f, g]
(Deck live load = 40 psf, deck dead load = 10 psf)

JOIST SPAN	6′ and less	6′1″ to 8′	8′1″ to 10′	10′1″ to 12′	12′1″ to 14′	14′1″ to 16′	16′1″ to 18′
Connection details	On-center spacing of fasteners[d, e]						
$^1/_2$ inch diameter lag screw with $^{15}/_{32}$ inch maximum sheathing[a]	30	23	18	15	13	11	10
$^1/_2$ inch diameter bolt with $^{15}/_{32}$ inch maximum sheathing	36	36	34	29	24	21	19
$^1/_2$ inch diameter bolt with $^{15}/_{32}$ inch maximum sheathing and $^1/_2$ inch stacked washers[b, h]	36	36	29	24	21	18	16

For SI: 1 inch = 25.4 mm, 1 foot = 304.8 mm. 1 pound per square foot = 0.0479kPa.

a. The tip of the lag screw shall fully extend beyond the inside face of the band joist.
b. The maximum gap between the face of the ledger board and face of the wall sheathing shall be $^1/_2$″.
c. Ledgers shall be flashed to prevent water from contacting the house band joist.
d. Lag screws and bolts shall be staggered in accordance with Section R502.2.2.1.1.
e. Deck ledger shall be minimum 2 × 8 pressure-preservative-treated No.2 grade lumber, or other approved materials as established by standard engineering practice.
f. When solid-sawn pressure-preservative-treated deck ledgers are attached to a minimum 1 inch thick engineered wood product (structural composite lumber, laminated veneer lumber or wood structural panel band joist), the ledger attachment shall be designed in accordance with accepted engineering practice.
g. A minimum 1 × $9^1/_2$ Douglas Fir laminated veneer lumber rimboard shall be permitted in lieu of the 2-inch nominal band joist.
h. Wood structural panel sheathing, gypsum board sheathing or foam sheathing not exceeding 1 inch in thickness shall be permitted. The maximum distance between the face of the ledger board and the face of the band joist shall be 1 inch.

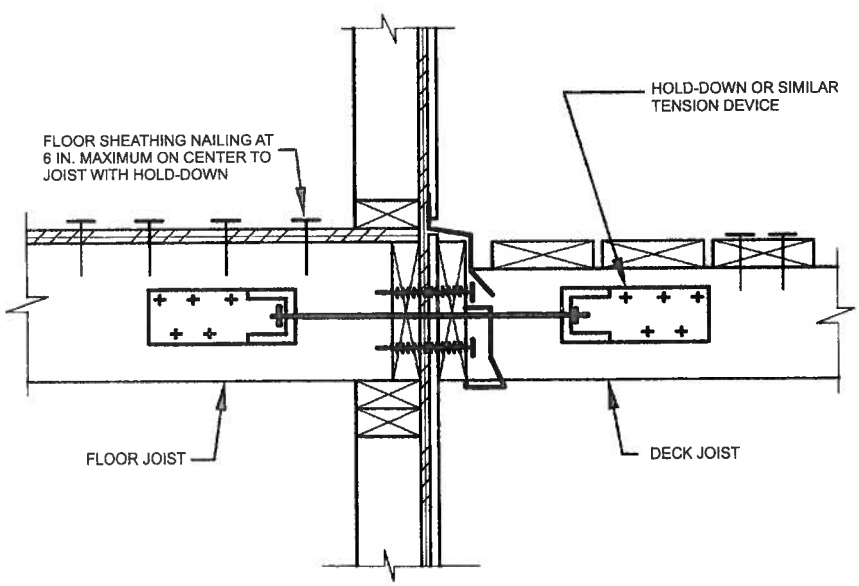

For SI: 1 inch = 25.4 mm.

FIGURE 502.2.2.3
DECK ATTACHMENT FOR LATERAL LOADS