ITEM NO. 13

STAFF REPORT

CITY OF OCEANSIDE

DATE: January 24, 2007

TO: Honorable Mayor and City Councilmembers

FROM: Public Works Department

SUBJECT: **APPROVAL OF AN ENCROACHMENT PERMIT AGREEMENT WITH OMNIPOINT COMMUNICATIONS, INC., AUTHORIZING PERMITTEE TO ENCROACH UPON A PORTION OF THE PUBLIC RIGHT-OF-WAY AT 7708½ EL CAMINO REAL, SOLELY FOR WIRELESS TELECOMMUNICATIONS PURPOSES**

SYNOPSIS

Staff recommends that the City Council approve a ten-year encroachment permit agreement with Omnipoint Communications, Inc., a subsidiary of T-Mobile U.S.A. (T-Mobile), for a minimum total revenue of $123,000 authorizing encroachment on a portion of the public right-of-way at 7708½ El Camino Real, and authorize the City Manager to execute the agreement.

BACKGROUND

T-Mobile has requested to encroach upon a portion of the public right-of-way for installation of T-Mobile's personal wireless service antennas and equipment as described and illustrated in the attached Exhibit A. Members of the Oceana Homeowner's Association had some concerns regarding this site, such as safety of cell towers, and whether the equipment would encroach onto the property of the Homeowner's Association.

ANALYSIS

The City may regulate the placement, construction and modification of personal wireless service facilities as long as such regulations are non-discriminatory and do not have the effect of prohibiting the provision of wireless phone services. The City has the authority to manage the public right-of-way and to require fair and reasonable compensation from telecommunications providers on a competitively neutral and nondiscriminatory basis for use of the public right-of-way.

In order to address the issues raised by the members of the Oceana Homeowner's Association T-Mobile and staff met with the homeowners to address their concerns. T-Mobile explained the nature of their equipment and had the property staked out by a licensed surveyor, and staff is satisfied that T-Mobile's equipment will be within the right-of-way and in compliance with all City regulations applicable to cell towers.

FISCAL IMPACT

The agreement requires a one-time initial payment in the amount of $3,000 to the City for administrative activities related to the agreement. Annual payments in the amount of $12,000 are payable to the City on or before the first day of July each year, and will be adjusted annually, based upon the percentage change in the CPI (Consumer Price Index). The revenues generated by the cellular sites accrue to the City's General Fund (1010.4153.00006) and the value with this and other cell sites is approximately $452,000 annually.

COMMISSION OR COMMITTEE REPORT

Does not apply.

INSURANCE REQUIREMENTS

Permittee will be required to maintain the City's standard insurance requirements over the term of the agreement.

CITY ATTORNEY'S ANALYSIS

The referenced documents have been reviewed by the City Attorney and approved as to form.

RECOMMENDATION

Staff recommends that the City Council approve a ten-year encroachment permit agreement with Omnipoint Communications, Inc., a subsidiary of T-Mobile U.S.A. (T-Mobile), for a minimum total revenue of $123,000 authorizing encroachment on a portion of the public right-of-way at 7708½ El Camino Real, and authorize the City Manager to execute the agreement.

PREPARED BY:

Heidi Janz
Program Specialist

SUBMITTED BY:

Barry E. Martin
Interim City Manager

REVIEWED BY:

Michelle Skaggs-Lawrence, Interim Deputy City Manager

Peter A. Weiss, Public Works Director

Douglas E. Eddow, Real Property Manager

Nita McKay, Financial Services Director

Exhibit A

7708 ½ El Camino Real
Oceanside, CA 92057
El Camino Real ROW
SD07102A

ENCROACHMENT PERMIT AGREEMENT BETWEEN THE CITY OF OCEANSIDE, CALIFORNIA AND OMNIPOINT COMMUNICATIONS, INC.

A Subsidiary of T-Mobile U.S.A., I nc.
7708 ½ El Camino Real
SD07102A

This Encroachment Permit Agreement ("Agreement") is entered into this _____ day of_____, 2006, by and between the City of Oceanside, a California municipal corporation, hereinafter referred to as the ("City") and Omipoint Communications, Inc., a subsidiary of T-Mobile USA, Inc., hereinafter referred to as ("Permittee"). The effective date shall be the date this Agreement is approved by the Oceanside City Council, as evidenced by the date indicated hereinabove (the"Effective Date").

R E C I T A L S

WHEREAS, 47 U.S.C. § 253 (a) provides that no City requirement may prohibit or have the effect of prohibiting the ability of any entity to provide any interstate or intrastate telecommunications service;

WHEREAS, 47 U.S.C. § 332 (c) (7) provides that local government may regulate the placement, construction, and modification of personal wireless service facilities as long as such regulations are non-discriminatory and do not have the effect of prohibiting the provision of wireless phone services;

WHEREAS, 47 U.S.C. § 253 (c) provides that nothing in this section affects the City's authority to manage the public rights-of-way or to require fair and reasonable compensation from telecommunications providers, on a competitively neutral and nondiscriminatory basis, for use of the public rights-of-way;

WHEREAS, City is responsible for management of the public rights-of-way and performs a wide range of vital tasks necessary to preserve the physical integrity of public streets and ways, to control the orderly flow of vehicles, to promote the safe movement of pedestrians, and to manage a number of gas, water, sewer, electric, cable television, telephone and telecommunications facilities that crisscross streets and public ways;

WHEREAS, California Government Code 50030 entitles City to recover costs incurred for entering and administering this agreement, and for any and all costs incurred during construction of telecommunications facilities in the public rights-of-way, and for future installation, operation, maintenance, repair, and removal of facilities from the public rights-of-way;

WHEREAS, Permittee is licensed by the Federal Communications Commission (the "FCC") to provide wireless phone services to the general public, which services may be provided to customers both inside and outside the corporate boundaries of the City;

WHEREAS, Permittee is the holder of a Federal License and State Wireless Registration Identification Number U-0356-C issued by the California Public Utilities Commission of the State of California ("CPUC");

WHEREAS, Permittee has submitted an application requesting to encroach upon and occupy portions of the public rights-of-way in certain streets, easements and/or public ways for the purposes of installing Permittee's Facilities;

WHEREAS, in consideration of Permittee's request City is willing to approve Permittee's use and occupation of certain public rights-of-way upon the terms, conditions and other considerations set forth herein.

A G R E E M E N T

NOW THEREFORE, in consideration thereof and for other valuable consideration as set forth herein the parties hereto do mutually agree as follows:

Section 1. **Authorization.** Subject to the terms and conditions contained herein, City hereby authorizes Permittee to encroach upon, a portion of the public rights-of-way and to replace an existing City-owned street light pole with a new City-owned light pole to accommodate both the City's standard street light fixture and Permittee's wireless telecommunications facilities located at 7708 ½ El Camino Real, Oceanside, CA hereinafter referred to as the "Rights-of-Way", as described and illustrated in those certain improvement drawings as approved by and on file as a public record with the City Engineer of the City of Oceanside ("City Engineer"), **SD07102A, El Camino Real ROW** (the "Improvement Drawings"), which are incorporated herein and made a part hereof, upon issuance of a valid Construction Certificate and/or Encroachment Permit, for the purpose of constructing, operating, maintaining, repairing and removing telecommunications facilities, hereinafter referred to as the "Permittee's Facilities", as more fully described and illustrated in said Improvement Drawings.

Section 2. **Term.** The commencement date shall be first day of the month following the Effective Date of this Agreement. This Agreement authorizes the Permittee to encroach upon the Rights-of-Way for so long as the Permittee is using the encroachment to provide wireless phone services; provided, however, that the terms and conditions of this Agreement shall be reviewed and, if necessary, renegotiated in a manner consistent with applicable law at the end of ten (10) years and every five (5) years thereafter. Failure of the Permittee to renegotiate in good faith for purposes of reaching an agreement on proposed alterations, if any, in the terms and conditions of this Agreement shall be grounds for termination of this Agreement pursuant to Section 27 herein.

Section 3. **Scope of Agreement.** This Agreement authorizes the Permittee to lease a City-owned street light and to encroach upon and occupy the Rights-of-Way upon issuance of a valid Construction Certificate and/or Encroachment Permit by the City Engineer for the installation, maintenance and operation of Permittee's Facilities, as identified in said Improvement Drawings, solely for the Permittee's wireless telecommunications purposes.

By entering into this Agreement, Permittee acknowledges that the fee charged by City for use of the city-owned street light pole is fair and reasonable and constitutes a negotiated fee between the parties. Permittee hereby waives any current or future rights reserved under California Government Code Section 50300, California Public Utility Code, or the Telecommunications Act of 1996 (the "Act") including, but not limited to, those rights set forth in Section 253 (c) and 332 (c) (7) of the Act to challenge said fees charged by City pursuant to this Agreement.

Nothing contained in this Agreement shall be deemed or construed to create the relationship of principal and agent or of partnership or of joint-venture or of any association whatsoever between City and Permittee, it being expressly understood and agreed that neither the computation of fees nor any other provisions contained in this Agreement nor any act or acts of the parties hereto shall be deemed to create any relationship between City and Permittee other than the relationship of City and permittee.

Permittee hereby acknowledges, agrees and covenants that this Agreement only allows for the lease of a City-owned street light, and placement of ancillary structures within the Rights-of-Way of Permittee's wireless telecommunications facilities identified in said Improvement Drawings and does not authorize or bestow any rights to Permittee to provide cable television service, or other telecommunications services not authorized by Permittee's Federal License or State Wireless Registration and that the provision of such services shall require separate and specific written authorization from City.

Should Permittee apply for service permission to use the Permittee's Facilities for purposes other than wireless services authorized by Permittee's License or State Wireless Registration, City reserves the right to impose any other prospective lawful requirements. The imposition of the fees specified in this Agreement shall not preclude the imposition of additional prospective compensation requirements if otherwise allowed by applicable law from time to time.

Section 4. **Compensation.**

a. **Administration Fee.** Permittee, shall make a one time initial payment to the City of Three Thousand Dollars ($3000.00) for administration activities related to this Agreement, concurrent with the execution of this Agreement by the parties hereto.

b. **Annual Fee.** Upon commencement of this Agreement, Permittee shall pay to the City an Annual Fee of Twelve Thousand Dollars ($12,000.00) to reimburse the City's costs incurred as a result of Permittee's lease of a City-owned street light pole. The Annual Fee shall be adjusted in accordance with Section 4.c below.

Permittee shall pay the City all Annual Fee payments annually in advance, without demand from City, on or before the first (1st) day of July each year and in accordance with this Section, whether or not the City-owned street light is occupied by Permittee's Facilities when said payments become due. The first annual payment shall be due upon commencement and shall be prorated from commencement date to June 30, 2007.

Checks shall be made payable to the City of Oceanside and delivered to the City Property Manager at 300 N. Coast Highway, Oceanside, CA 92054. City may change the place and time of payment at any time upon 30-days written notice to Permittee. Permittee agrees to pay City an additional Twenty Five Dollars and no cents ($25.00) for any returned check which is not honored by the financial institution from which the check is drawn, which amount shall be considered as additional Annual Fee payment.

c. **Minimum Annual Fee Adjustment Date.** The Annual Fee adjustment date shall be the first (1st) day of July of each year following the date of commencement as defined in Section 2 of this Agreement as set forth below.

d. **Adjustment Index.** The index used will be the semi-annual Consumer Price Index for "All Urban Consumers" for San Diego, California, published for January of each year of this Agreement. If this index is no longer published, the index for adjustment will be the U.S. Department of Labor's "Comprehensive Official Index" most comparable to the aforesaid index.

If the Department of Labor indices are no longer published, another index generally recognized as authoritative will be substituted by agreement of City and Permittee. If the parties cannot agree within 60 days after demand by either party, a substitute index will be selected by the Chief Officer of the Regional Office of the Bureau of Labor Statistics or its successor. Any reference in this Agreement to "CPI" or "index" shall mean the index used in accordance with this Subsection 4d.

Regardless of the index publication dates, the Annual Fee adjustment dates shall be on the dates defined by Subsection 4c above. Until the Annual Fee adjustment can be actually calculated in accordance with this Agreement, Permittee shall continue to make payments at the existing Annual Fee rate. When the adjustment is calculated, the balance of fees due at the adjusted rate, from the Annual Fee adjustment date through the date of calculation, will be paid to City within 30 days of written notice by the City. In no event shall the adjusted Annual Fee as established by the CPI be less than the Annual Fee in existence immediately prior to the adjustment date.

e. **Minimum Annual Fee Adjustment Computation.** The Annual Fee adjustment shall be computed in accordance with the following definitions and formulas:

Definitions:

Initial Annual Fee: The Annual Fee at the commencement of this Agreement as listed in Subsection 4b above.

Existing Annual Fee: The existing Annual Fee shall be the Annual Fee amount in effect on the date preceding the Annual Fee adjustment date.

Percent change in the CPI: The percent change in the CPI shall be the percent change in the San Diego All Consumer Index over the preceding 12-month period covered by the most recent publication of the Index.

Annual Fee Adjustment Formulas:

First Adjustment: Initial Annual Fee amount + (Initial Annual Fee x the percent change in the CPI) = New minimum Annual Fee.

For example: $100 + ($100 x 5%) = $105

Subsequent Adjustments: Existing Annual Fee amount + (Initial Annual Fee amount x the percent change in the CPI) = New minimum Annual Fee.

For example: $105 + ($100 x 6%) = $111

However, in no event shall the adjusted fee increase be less than four percent (4%) nor more than eight percent (8%) per year.

Section 5. Delinquent Payment. Permittee assumes all risk of loss and responsibility for delinquent payments. If Permittee fails to make payments when due, a delinquent payment charge on any unpaid amount shall accrue from the due date until paid at a rate of one and one-half percent (1½ %) per month until paid. Permittee's failure to make payments when they are due is considered a default of the terms of the Agreement, subject to the terms stated in Section 25, "Defaults and Termination."

Section 6. Assignment or Transfer of Authorization. This Agreement may be assigned or transferred to any qualified person or entity subject to the prior written approval of the City, which shall not be unreasonably withheld, provided Assignee first files for review and approval by the City Property Manager in a form reasonably acceptable with the City, an affidavit and other supporting documentation demonstrating the proposed Transferee's: (1) acceptance of and agreement to comply with all terms and conditions of this Agreement, (2) possession of a Federal License and State Wireless Registration Identification Number issued by the CPUC, (3) insurance coverage meeting the requirements as set forth in Section 13 herein, and (4) funding of the Performance Bond as set forth in Section 14.

Section 7. Responsibility of Permittee. The Permittee, on the Permittee's own behalf and on behalf of any successor or assign, shall acknowledge and assume all responsibility, financial or otherwise, for the permitted use of the Rights-of-Way and the planning, design, installation, construction, maintenance, repair, operation and removal of the Permittee's Facilities, which shall be undertaken without risk or liability on the part of the City. All of Permittee's construction and installation work shall be performed at Permittee's sole cost and expense and in a good and workmanlike manner and in accordance with plans and specifications,

including but not limited to design standards, first approved by the City Engineer, and in compliance with all applicable ordinances, regulations or law.

Permittee shall maintain or cause to be maintained the structural integrity of Permittee's Facilities and to keep all of Permittee's Facilities in good repair. City shall retain ownership and responsibility to maintain the City's light fixture installed by Permittee, including the routine maintenance and repair and replacement of streetlights.

Permittee shall remove all of Permittee's Facilities at its sole expense on or before the expiration or earlier termination of the Agreement, unless an agreement is otherwise reached between the City and Permittee to abandon the Permittee's Facilities in place. Permittee shall bear full responsibility for repairs to any damage to the Rights-of-Way caused by such installation, construction, maintenance, repair, operation and removal of the Permittee's Facilities.

Section 8. **Permittee to Bear All Costs.** The Permittee, or any successor or authorized assign, shall bear all costs incurred in connection with the planning, design, installation, construction, maintenance, repair, operation and removal of the Permittee's Facilities. The Permittee shall be responsible and must bear all cost for repair of any damage or movement of the Permittee's Facilities due to repair, maintenance and/or failure/collapse of any existing gas, water and sewer lines or any other improvements or works approximate to Permittee's Facilities regardless of whether or not such damage may be directly or indirectly attributable to the installation, operation, maintenance, repair or upgrade of the Permittee's Facilities, except for the active negligence or willful misconduct of the City, its officers, agents or employees.

Section 9. **Permittee Has No Prior Rights.** Permittee has no prior rights for use of the Rights-of-Way with regard to future conversion of overhead to underground utilities. Permittee has been advised and understands that the utilities in the area of Permittee's planned facilities are subject to future undergrounding requirements. Permittee agrees to relocate its facilities, as set forth herein, and more specifically as set forth in Section 10, upon City's notice to do so.

Section 10. **Future Rules or Orders.** The Permittee, or any successor or authorized assign, shall abide by any agreements, rules, regulations, orders, or directives governing the use of the Rights-of-Way as the City may find necessary or appropriate in the exercise of its police powers. Permittee shall bear all costs resulting from any relocation of Permittee's Facilities resulting from such agreements, rules, regulations, or directives. When utilities within the said Rights-of-Way are subject to undergrounding, within a reasonable time after receipt of the City's written notice to do so, Permittee shall relocate Permittee's Facilities at its sole cost and expense to some other location in the public rights-of-way designated by the City Engineer and acceptable to the Permittee. Permittee shall prepare and submit, together with payment of all related fees, any and all plans and specifications required for relocation and obtain all permits required for the construction, installation, maintenance and operation of Permittee's Facilities at the new location in public rights-of-way.

Section 11. **Permittee to Secure Approval and Permits.** Prior to construction and installation of Permittee's Facilities, Permittee shall, at its sole cost and expense, prepare and submit, together with payment of all related fees, any and all plans and specifications required by the City Engineer, which shall include detailed maps showing the planned construction, the size and the location and number, and any other details regarding placement of appurtenant above-ground equipment to be located in the Rights-of-Way. The City Planning Director and the Public Works Director shall be authorized to review Improvement Drawings and to impose such requirements allowable by law as necessary related to the placement and the aesthetics of the above-ground improvements. The City Engineer shall be authorized to require an alternate location for the Permittee's Facilities within the Rights-of-Way to avoid conflict with public safety as well as other permitted uses in or future public needs of the Rights-of-Way. Permittee shall, at its sole cost and expense, submit traffic control plans for approval by City Engineer. The City reserves the right to inspect the installation and maintenance of Permittee's Facilities at any time. Permittee shall pay all plan check, inspection and other related fees prior to the issuance of any permit for the installation and construction of Permittee's Facilities. All work within the Rights-of-Way shall be performed in strict compliance with plans and permits approved by the City Engineer.

Section 12. **As Built Drawings to be Provided.** The Permittee shall provide as-built drawings, in a format acceptable to the City Engineer, detailing the location of Permittee's Facilities installed pursuant to this Agreement.

Section 13. **Liability Insurance.** Permittee and any contractor or contractors acting on behalf of Permittee under this Agreement, shall take out and maintain at all times during the term of this Agreement the following insurance at its sole expense.

a. Permittee shall maintain liability insurance in the following minimum limits for bodily injuries and property damage resulting from the Permittee's or its contractor's activities with regard to the authorized encroachment:

Comprehensive General Liability Insurance
(bodily injury and property damage)

Combined single limit per occurrence	$1,000,000
General aggregate	$2,000,000 *

Commercial General Liability Insurance
(bodily injury and property damage)

General limit per occurrence	$1,000,000
General limit project specific aggregate	$2,000,000

Automobile Liability Insurance	$1,000,000

* General aggregate per year, or part thereof, with respect to losses or other acts or omission of Permittee under this Agreement.

b. All insurance companies affording coverage to the Permittee shall be required to add the City of Oceanside as "additional insured" under the insurance policy(s) required in accordance with this Agreement. Insurance coverage provided to the City as an additional insured shall be primary insurance and other insurance maintained by the City, its officers, agents and employees shall be excess only and not contributing with the insurance provided pursuant to this Agreement.

c. All insurance companies affording coverage to the Permittee shall be insurance organizations acceptable to the City, authorized by the Insurance Commissioner of the State Department of Insurance to transact business of insurance in the State of California and must carry a rating by Best of not less than "A-".

d. All insurance companies affording coverage shall provide 30 days written notice to the City of Oceanside should the policy be canceled before the expiration date. For the purposes of this notice requirement, any material change in the policy prior to the expiration shall be considered a cancellation.

e. Permittee shall provide evidence of compliance with the insurance requirements listed above by providing a certificate of insurance, in a form satisfactory to the City Attorney, concurrently with the submittal of this Agreement.

f. Permittee shall provide a substitute certificate of insurance no later than 30 days prior to the policy expiration date. Failure by the Permittee to provide such a substitution and extend the policy expiration date shall be considered a default by Permittee and may subject the Permittee to a termination of this Agreement.

g. Maintenance of insurance by the Permittee as specified in this Agreement shall in no way be interpreted as relieving the Permittee of any responsibility whatever and the Permittee may carry, at its own expense, such additional insurance as it deems necessary.

h. If Permittee fails or refuses to take out and maintain the required insurance, or fails to provide the proof of coverage, City has the right to obtain the insurance. Permittee shall reimburse City for the premiums paid with interest at the maximum allowable legal rate then in effect in California. City shall give notice of the payment of premiums within 30 days of payment stating the amount paid, names of the insurer(s) and rate of interest. Said reimbursement and interest shall be paid by Permittee on the first (1st) day of the month following the notice of payment by City.

Notwithstanding the preceding provisions of this Subsection, any failure or refusal by Permittee to take out or maintain insurance as required in this Agreement, or failure to provide the proof of insurance, shall be deemed a default under this Agreement.

i. City may require the revision of amounts and coverage at any time during the term of this Agreement by giving Permittee 60 days prior written notice. City's requirements shall be designed to assure protection from and against the kind and extent of risk existing on the Rights-of-way. Permittee also agrees to obtain any additional insurance required by City for new

improvements, in order to meet the requirements of this Agreement.

Section 14. **Performance Bond.** Prior to commencement of work under this Agreement, Permittee shall furnish to City a good and sufficient bond, in the form approved by the City Attorney, entitled Surety Performance Bond, for the minimum amount of One Hundred Thousand dollars ($100,000), securing the faithful performance by Permittee of all obligations of this Agreement including timely annual payments, work, construction, installation, and removals required to be performed by Permittee under this Agreement within the time periods set forth hereunder.

Section 15. **Accident Reports.** Permittee shall, within 48 hours after occurrence, report to City any accident causing property damage or any serious injury to persons resulting from any of Permittee's activities under this Agreement. This report shall contain the names and addresses of the parties involved, a statement of the circumstances, the date and hour, the names and addresses of any witnesses and other pertinent information.

Section 16. **Indemnification of City.** Permittee shall defend, indemnify and hold harmless the City and its council members, officers, agents and employees against all liabilities, special, incidental, consequential, punitive, and all other damages to persons or property arising out of the conduct of the Permittee or its employees, agents or others in connection with or related to its use and occupation of the Rights-of-Way under this Agreement or event with respect to Permittee's Facilities, except only for those claims arising from the sole negligence or willful misconduct of the City, its officers, agents, or employees. Such indemnification applies to all events involving City-owned light poles or other structures upon which Permittee's equipment is now or may ever be located. Permittee's indemnification shall include any and all costs, expenses, attorney's fees and liability incurred by the City, its council members, officers, agents, or employees in defending against such claims, whether the same proceed to judgment or not. Further, Permittee at its own expense shall, upon written request by the City, defend any such suit or action brought by third parties against the City, its officers, agents, or employees.

Section 16.1 **Waiver of Claims.** Permittee hereby waives any and all claims, demands, causes of action, and rights it may assert against the City on account of any loss, damage, or injury to any equipment or any loss or degradation of the services as a result of any event or occurrence which is beyond the reasonable control of the City.

Section 16.2 **Limitation of the City's Liability.** The City shall be liable only for the cost of repair to damaged equipment arising from the sole negligence or sole willful misconduct of City, its employees, agents, or contractors and shall in no event be liable for indirect or consequential damages. City's total liability under this Agreement shall be limited to the annual aggregate fees paid by Permittee to the City in the year under which such liability arises.

Section 17. **Revocation of Authorization.** If the Permittee fails to comply with any of the terms and conditions of this Agreement and/or any applicable ordinance, regulation or law, the City may revoke the authorization granted herein, subject to the terms and conditions stated in Section 25, "Defaults and Termination".

Section 18. **Terms and Conditions Specific to this Agreement.** The terms and conditions of this Agreement shall apply solely to the Permittee's Facilities described in the Improvement Drawings and installation necessary for Permittee's wireless communication service, and shall not apply to, nor establish any precedent for, the conditions the City may impose upon Permittee in the event Permittee seeks to provide other telecommunications services or cable services to the public for hire within the City.

Section 19. **Current Enforceability.** The rights granted by this Agreement are granted based upon representations by Permittee that its Federal License and State Wireless Registration Identification Number authorize construction and operation of activities in relation to this Agreement. By entering into this Agreement, neither City nor Permittee waive any rights reserved to either party under applicable Federal and State law. In addition, neither party waives any rights reserved under the Telecommunications Act of 1996 (the "Act") including, but not limited to, those rights set forth in Section 253 (c) of the Act, reserving to municipalities the right to manage their Rights-of-Way and to require fair, non-discriminatory and reasonable compensation from telecommunications providers for use of public rights-of-way. Should Permittee use the Permittee's Facilities for purposes not authorized by Permittee's Federal License or State Wireless Registration, or if it is ultimately determined that City is not precluded by CPUC Code, or otherwise, from imposing reasonable prospective requirements upon the Permittee's Facilities other than those specified in the Agreement and other required permits, including, without limitation, additional prospective compensation requirements, City reserves the right to charge Permittee full, reasonable, and competitively neutral compensation for the use of City-owned facilities and the Rights-of-Way or to impose any other prospective lawful requirements. The imposition of the fee specified in Paragraph 4 hereof shall not preclude the imposition of additionally prospective compensation requirements if otherwise allowed by applicable law from time to time.

Section 20. **Governing Law; Jurisdiction.** This Agreement shall be governed and construed by and in accordance with the laws of the United States and the State of California without reference to general conflicts of law principles. If suit is brought by a party to this Agreement, the parties agree that trial of such action shall be vested exclusively in the State courts of San Diego County, California or in the United States District Court, Southern District of California. Nothing in this section shall be interpreted to preclude either party's right to seek redress from the Federal Communications Commission.

Section 21. **Relocation of Facilities.** Permittee agrees that whenever any of the Permittee's Facilities shall unnecessarily inconvenience the public and/or public facilities, the City may require the relocation of any such telecommunications facilities at the Permittee's expense, without making any claim against the City for reimbursement or damage therefore. Relocation(s) initiated for installation of public facilities to serve private development shall be at the expense of the developer.

Section 22. **Amendment of Agreement.** This Agreement may not be amended except pursuant to a written instrument signed by both parties.

Section 23. **Entire Agreement.** This Agreement contains the entire understanding between the parties with respect to the subject matter herein. There are no representations, agreements, or understandings, whether oral or written, between or among the parties relating to the subject matter of this Agreement which are not fully expressed herein. Each party has relied on advice from its own attorneys, and the warranties, representations, and covenants of this Agreement itself.

The Permittee shall be responsible for complying with all Local, State, and Federal laws whether or not said laws are expressly stated or referred to herein.

Should any provision herein be found or deemed to be invalid, the Agreement shall be construed as not containing such provision, and all other provisions which are otherwise lawful shall remain in full force and effect, and to this end the provisions of this Agreement are severable.

This Agreement shall inure to the benefit of and be binding upon the parties hereto and their respective successors and assigns.

Section 24. **Taxes.** Permittee shall pay, before delinquency, all taxes, assessments, and fees assessed or levied upon Permittee or the Permittee's Facilities, including, any buildings, structures, machines, equipment, appliances, or other improvements or property of any nature whatsoever erected, installed, or maintained by Permittee or levied by reason of the business or other Permittee activities related to this Agreement, including any licenses or permits.

The parties agree that no possessory interest is created by this Agreement and that all light poles and other public facilities including those constructed by or at the direction of Permittee, remain City's sole property. However, to the extent that a possessory interest is deemed created, Permittee acknowledges that notice is and was hereby given to Permittee pursuant to California Revenue and Taxation Code Section 107.6 that use or occupancy of any public property pursuant to the authorization herein set forth may create a possessory interest which may be subject to the payment of property taxes levied upon such interest. Permittee shall be solely liable for, and shall pay and discharge prior to delinquency, any and all possessory interest taxes or other taxes levied against Permittee's right to possession, occupancy, or use of any public property pursuant to any right of possession occupancy, or use created by this Agreement.

Section 25. **Notices.** All notices, demands, requests, consents or other communications which this Agreement contemplates or authorizes, or requires or permits either party to give to the other, shall be in writing and shall be personally delivered or mailed to the respective party as follows:

TO CITY:

City of Oceanside
Attention: Property Manager
300 North Coast Highway

7708 ½ El Camino Real
Oceanside, CA 92057
El Camino Real ROW
SD07102A
Oceanside, CA 92054

TO PERMITTEE:

T-Mobile USA
12920 SE 38th Street
Bellevue, Washington 98006
Attn: PCS Lease Administrator

With a copy to:

Omnipoint Communications, Inc.,
a subsidiary of T-Mobile U.S.A.
10180 Telesis Court, Suite 333
San Diego, California 92121
Attn: Lease Administration Manager

Either party may change its address by notice to the other party as provided herein. Communications shall be deemed to have been given and received on the first to occur of (i) actual receipt at the offices of the party to whom the communication is to be sent, as designated above, or (ii) three working days following the deposit in the United States Mail of registered or certified mail, postage prepaid, return receipt requested, addressed to the offices of the party to whom the communication is to be sent, as designated above.

Section 26. Termination for Convenience. Either party may terminate this Agreement upon thirty (30) days prior written notice.

In the event the City terminates this Agreement, or if street widening or other improvements necessitates relocation of Permittee's Facilities, Permittee shall, at City's request, relocate Permittee's Facilities to an alternate right-of-way location that provides suitable replacement coverage, or shall move the antenna equipment to a pole or vertical support structure to be provided and installed by applicant at applicant's expense but to be consistent with City design standards and approved by the City Engineer as being constructed in a safe manner that does not unreasonably incommode vehicle or pedestrian traffic.

Section 27. Defaults and Termination. This Agreement may be terminated without further liability on thirty (30) days prior written notice as follows: (i) by either party upon a default of any covenant or term hereof by the other party, which default is not cured within thirty (30) days of receipt of written notice of default, provided that the grace period for any monetary default is ten (10) days from receipt of notice; or (ii) by Permittee if it does not obtain or maintain any license, permit or other approval necessary for the construction and operation of Permittee Facilities: or (iii) by Permittee if Permittee is unable to occupy and utilize the Rights-of-Way due to an action of the FCC.

If either party ("demanding party") has a good faith belief that the other party ("defaulting party") is not complying with the terms of this Agreement, the demanding party shall give written notice of the default (with reasonable specificity) to the defaulting party and demand the default to be cured within thirty (30) days of the notice.

If the defaulting party is actually in default of this Agreement and fails to cure the default within thirty (30) days of the notice, or, if more than thirty (30) days are reasonably required to cure the default and the defaulting party fails to give adequate assurance of due performance within ten (10) days of the notice, the demanding party may terminate this Agreement upon written notice to the defaulting party.

City may also terminate this Agreement upon written notice to Permittee in the event that:

a. Permittee has previously been notified by City of Permittee's default under this Agreement and Permittee, after beginning to cure the default, fails to diligently pursue the cure of the default to completion, or

b. Permittee shall voluntarily file or have involuntarily filed against it any petition under any bankruptcy or insolvency act or law, or

c. Permittee shall be adjudicated a bankruptcy, or

d. Permittee shall make a general assignment for the benefit or creditors.

Section 28. **Other Regulations.** All Permittee's use of the Rights-of-Way under this Agreement shall be in accordance with the laws of the United States of America, the State of California and in accordance with all applicable rules and regulations and ordinances of the City of Oceanside now in force, or hereinafter prescribed or promulgated by resolution or ordinance or by State or Federal law.

Section 29. **Related Actions.** By the granting of this agreement, neither City nor the Council of the City is obligating itself to any other governmental agent, board, commission, or agency with regard to any other discretionary action relating to the use of the Rights-of-Way. Discretionary action includes, but is not limited to, conditional use permits, environmental clearances or any other governmental agency approvals which may be required for the development and operation of the Permittee's Facilities within the Rights-of-Way.

Section 30. **Use of the Rights-of-Way.** Permittee acknowledges that the paramount use of Rights-of-Way is for public services. Permittee agrees to coordinate use of the Rights-of-Way with City so as not to conflict with City's programs and activities.

Section 31. **Number and Gender.** Words of any gender used in this Agreement shall include any other gender, and words in the singular number shall include the plural, when the tense requires.

Section 32. **Captions.** The Agreement outline, section headings, and captions for various articles and paragraphs shall not be held to define, limit, augment, or describe the scope,

content, or intent of any or all parts of this Agreement. The numbers of the paragraphs and pages of this Agreement may not be consecutive. Such lack of consecutive numbers is intentional and shall have no effect on the enforceability of this Agreement.

Section 33. **Powers to Enter into Agreement.** The individuals executing this Agreement represent and warrant that they have the right, power, legal capacity and authority to enter into and to execute this Agreement on behalf of the respective legal entities of the Permittee and the City.

IN WITNESS WHEREOF the parties hereto for themselves, their heirs, executors, administrators, successors, and assigns do hereby agree to the full performance of the covenants herein contained and have caused this Agreement to be executed by setting hereunto their signatures on the day and year respectively written herein below.

THE CITY OF OCEANSIDE

DATE: _____ By: _____
City Manager

APPROVED AS TO FORM:

By: _____ ASST
City Attorney

PERMITTEE:

OMNIPOINT COMMUNICATIONS, INC., A SUBSIDIARY OF T-MOBILE U.S.A., INC.

DATE: 09/25/06 By: _____
Name: Tim Fincham
Title: Director: Engineering & Operations
(San Diego/Las Vegas)

Approved as to form
_____
Regional Counsel
Lois J Duran

NOTARY ACKNOWLEDGEMENTS OF PERMITTEE SIGNATURES MUST BE ATTACHED

CALIFORNIA ALL-PURPOSE ACKNOWLEDGEMENT

STATE OF CALIFORNIA)

COUNTY OF San Diego)

On 09/25/06 (DATE) before me, Adeline B. Connolly, Notary Public (NAME, TITLE OF OFFICER – E.G., "JANE DOE, NOTARY PUBLIC

personally appeared, Tim Fincham

personally known to me (or proved to me on the basis of satisfactory evidence) to be the person~~(s)~~ whose name~~(s)~~ is~~/are~~ subscribed to the within instrument and acknowledged to me that he~~/she/they~~ executed the same in his~~/her/their~~ authorized capacity~~(ies)~~, and that by his~~/her/their~~ signature~~(s)~~ on the instrument the person~~(s)~~, or the entity upon behalf of which the person~~(s)~~ acted, executed the instrument.

WITNESS my hand and official seal.

Adeline Connolly (SEAL)
NOTARY PUBLIC SIGNATURE

ADELINE B. CONNOLLY
COMM. #1626949
NOTARY PUBLIC • CALIFORNIA
SAN DIEGO COUNTY
Comm. Exp. DEC. 5, 2009
MGC1

OPTIONAL INFORMATION

THIS OPTIONAL INFORMATION SECTION IS NOT REQUIRED BY LAW BUT MAY BE BENEFICIAL TO PERSONS RELYING ON THIS NOTARIZED DOCUMENT.

TITLE OR TYPE OF DOCUMENT _____

DATE OF DOCUMENT _____ NUMBER OF PAGES _____

SIGNERS(S) OTHER THAN NAMED ABOVE _____

SIGNER'S NAME _____ SIGNER'S NAME _____

RIGHT THUMBPRINT	RIGHT THUMBPRINT

EXHIBIT "A"

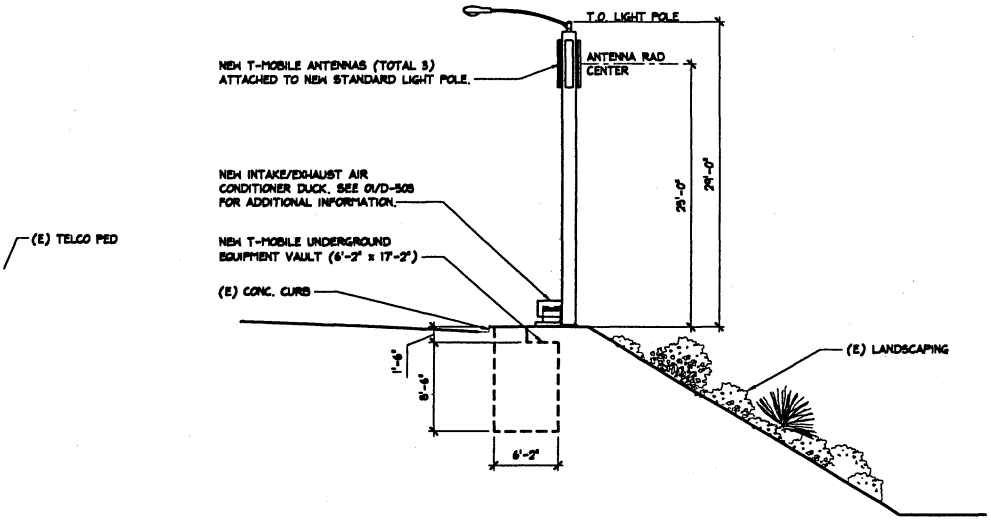

02 SOUTH ELEVATION

SCALE: 1/8" = 1'-0"

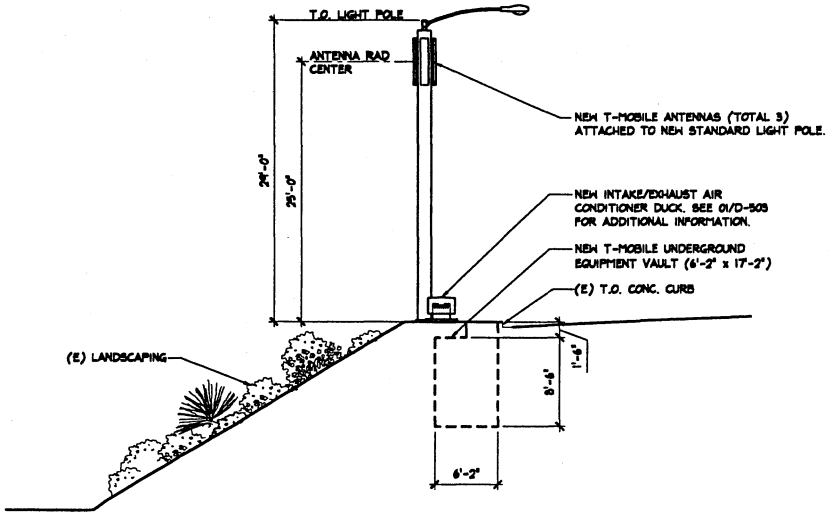

04 NORTH ELEVATION

SCALE: 1/8" = 1'-0"

No.	Revision / Issue	Date
A	Issued for CD Review	07-18-06
B	Client Comments	7-26-06

Exterior Elevations

EMERALD ISLE ROW
SD07102A
EL CAMINO REAL
OCEANSIDE, CA 92057

T-Mobile
10180 TELESIS CT
SAN DIEGO, CA 92121

MITCHELL J. ARCHITECTURE, INC.
5603 Ferwin Court, Suite F
Carlsbad, CA 92011
858.630.3130 (ph) / 858.630.3140 (fax)

Mitchell J. architecture

LICENSED ARCHITECT
MITCHELL J. CAMPBELL
No. C20355
REN. 3-31-07
STATE OF CALIFORNIA

Project	06586
Date	07-18-06
Drawn by	xll
Checked by	mjc
Scale	1/8" = 1'-0"

Mitchell J. Architecture

A-201

Plan Check No: