ITEM NO. 12

STAFF REPORT

CITY OF OCEANSIDE

DATE: June 20, 2007

TO: Chairman and Members, Community Development Commission

FROM: Economic Development & Redevelopment Department

SUBJECT: **APPROVAL OF AMENDMENT 2 TO THE PROFESSIONAL SERVICES AGREEMENT WITH PROJECT DESIGN CONSULTANTS FOR THE STORM DRAINS AND MYERS STREET IMPROVEMENTS PROJECT**

SYNOPSIS

Staff recommends that the Community Development Commission approve Amendment 2 in the amount of $112,000 to the professional services agreement with Project Design Consultants (PDC) of San Diego for preparation of construction drawings for the Storm Drain and Myers Street Improvements project generally located on Myers and Pacific Streets between Seagaze Drive and Pier View Way, for design of construction and improvement plans, coordination of meetings and project management; and authorize the City Manager to execute the amendment.

BACKGROUND

In August 2006, the City entered into a Professional Services Agreement with PDC in the amount of $24,800 to prepare conceptual design plans for the proposed storm drains generally located on Myers and Pacific Streets between Seagaze Drive and Pier View Way.

In January 2007, the Amendment 1 to the Professional Services Agreement with PDC in the amount of $24,600 for additional field surveys (potholing) to precisely locate light poles, trees and other potential obstructions for the relocation of the storm drains.

On February 21, 2007, the Commission approved a Regular Coastal Permit (RC-217-06) to upgrade and construct new storm drains generally located on Myers and Pacific Streets between Seagaze Drive and Pier View Way (see attached staff report). The civil engineering firm PDC designed the conceptual storm drain plans for the City.

ANALYSIS

The consultant prepared the initial concept plans for this project and this firm has been utilized for previous civil engineering projects. In addition, this firm is currently being utilized for the design of the proposed S.D. Malkin hotel and the CityMark development.

The Amendment would include all design of construction and improvements plans, coordination of meetings and project management in an amount not to exceed $112,000. Staff believes that the utilization of PDC would save the City time and money because of the

consultant's familiarity with the infrastructure located in the vicinity of the pier and surrounding streets.

FISCAL IMPACT

This consultant will be paid from the Redevelopment Drainage Improvement account (account No. 591-81885-5702), which has a current balance of $2,000,000.

INSURANCE REQUIREMENTS

The City's standard insurance requirements will be met.

COMMISSION OR COMMITTEE REPORT

The Redevelopment Advisory Committee reviewed this staff report at its May 23, 2007 meeting and approved it unanimously.

CITY ATTORNEY ANALYSIS

The referenced documents have been reviewed by the City Attorney and approved as to form.

RECOMMENDATION

Staff recommends that the Community Development Commission approve Amendment 2 in the amount of $112,000 to the professional services agreement with Project Design Consultants (PDC) of San Diego for preparation of construction drawings for the Storm Drain and Myers Street Improvements project generally located on Myers and Pacific Streets between Seagaze Drive and Pier View Way, for design of construction and improvement plans, coordination of meetings and project management; and authorize the City Manager to execute the amendment.

PREPARED BY:

Shan Babick
Associate Planner

SUBMITTED BY:

Peter A. Weiss
Interim Executive Director

REVIEWED BY:

Michelle Skaggs Lawrence, Deputy City Manager
Jane McVey, Economic and Redevelopment Director
Mike Blessing, Deputy City Manager
Kathy Baker, Redevelopment Manager

EXHIBITS/ATTACHMENTS

1. Staff report dated February 21, 2007
2. Amendment 1
3. Amendment 2
4. Professional Services Agreement

ITEM NO. 22

STAFF REPORT

CITY OF OCEANSIDE

DATE: February 21, 2007

TO: Chairman and Members of the Community Development Commission

FROM: Economic Development and Redevelopment Department

SUBJECT: **CONSIDERATION OF A RESOLUTION APPROVING A REGULAR COASTAL PERMIT (RC-217-06) TO UPGRADE AND CONSTRUCT NEW STORM DRAINS GENERALLY LOCATED ON MYERS AND PACIFIC STREETS BETWEEN SEAGAZE DRIVE AND PIER VIEW WAY – CITY' S STORM DRAIN – APPLICANT: CITY OF OCEANSIDE**

SYNOPSIS

The item under consideration is a Regular Coastal Permit to upgrade and construct new storm drains generally located on North Pacific and Myers streets between Seagaze Drive and Pier View Way. Staff is recommending that the Commission approve the project and adopt the resolution as attached.

BACKGROUND

The subject site consists of the City's existing street right-of-ways which was part of the original A.J. Myers Subdivision of 1885. In July 1980, the City Council adopted a Master Drainage Plan. One of the objectives of the Master Sewer and Water Plan is to "propose storm drain lines to remedy existing deficiencies and meet the needs of new development". The Redevelopment District was designated as District 5 as depicted on the 1980 Master Plan Drainage Map. The report further recommended that "storm drains located in the downtown area of Oceanside should be financed by Redevelopment funds allocated by the City Council".

The subject site is situated within the Pier Area which consists of public amenities such as the outdoor amphitheater, Beach Community Center, Oceanside Pier and associated public facilities. East of the subject site is the AT&SF railroad tracks and commercial uses.

Land Use and Zoning: The subject site is located within Subdistrict 12 and Subdistrict 15 of the "D" Downtown District. Subdistrict 12 is primarily intended to provide a special tourist/visitor-oriented Subdistrict that relates to the pier, ocean, beach, marina and freeway. Subdistrict 15 is primarily intended for public facilities, public parks, open spaces and other public-oriented uses.

Regular Coastal Permit: This project is situated within the Coastal Zone and requires a Regular Coastal Permit. Under the provisions of the Local Coastal Plan the project site is designated as Coastal Dependent, Recreation and Visitor Serving Commercial. Hotels, motels and restaurants are primarily the uses allowed within this land use designation.

The project is also situated within the Coastal Zone "appeal jurisdiction". Any local action by the City on this proposed coastal development permit may be appealed to the California Coastal Commission

Project Description: The project proposes to upgrade and construct new storm drains to be situated all within the City's existing right-of-way along North Pacific and Myers Street between Seagaze and Pier View Way. Specifically, the proposed improvements are as follows:

- New 24" storm drain to be situated within the City's right-of-way along the west side of Myers Street extending approximately 680 lineal feet from Seagaze Drive north to Pier View Way.

- New 30" storm drain to be situated within the City's right-of-way along the west side of Pacific Street extending approximately 420 lineal feet from Mission Avenue north to Pier View Way.

- New 30" storm drain to be situated within the City's right-of-way along the south side of Pier View Way extending approximately 260 lineal feet from Myers Street west to Pacific Street.

- New 8' X 16' storm drain filter and a new 36" storm drain to be situated approximately 25 feet north of the Oceanside Pier extending approximately 300 lineal feet from Pacific Street west to approximately 100 feet west of The Strand. The proposed 36" storm drain will replace the existing 18" storm drain (to be abandoned in place) which is located 10 feet south of the proposed storm drain.

The proposed project is estimated to cost $500,000 and will take approximately three months to construct. The project will likely be constructed in two phases with Phase I consisting of the construction of the storm drain from Pacific Street to The Strand. Phase I would also include the storm water filter and outlet (see attachment No. 4) and would be constructed during the off-season. Phase II would consist of the placement of new storm drains along Myers and Pier View Way streets.

Regular Coastal Permit: A Regular Coastal Permit is required because the project is situated within the Coastal Zone and proposes new construction that requires discretionary action.

Environmental Determination: A Certificate of Exemption has been prepared for the project. Under the provisions of the California Environmental Quality Act, the Community Development Commission will consider the exemption during its hearing on the project.

ANALYSIS

Staff's review of the proposed storm drains centered on its consistency with the underlying Redevelopment Plan, Zoning Ordinance, and the Local Coastal Program (LCP).

Section III. A. Coastal Act Policies, of the LCP states that Coastal Act "requires maintenance, protection and restoration of marine resources and coastal water quality, as well as control of discharges and run-off into the ocean and coastal wetlands". Section VII. New Development and Public Works, Coastal Act Policies A. of the LCP states the Coastal Act "limits new and expanded public works facilities to those facilities necessary to accommodate new development or uses permitted by the Act". Specifically, the LCP requires construction of new and upgraded storm drain facilities in the downtown area to "augment the existing facilities".

As designed, the proposed project would not disturb any environmentally sensitive areas of the Coastal Zone and will minimize water pollution into the Pacific Ocean. The proposed project would not restrict public access, obstruct public view or preclude essential public services. The proposed project would provide additional capacity to serve future growth in the Coastal Zone which is consistent with the Coastal Act policies. In addition, the existing storm water run off flows from the impervious parking lots into the storm drain system and outlets directly onto the beach. The proposed project not only upgrades the existing storm drain, but it also includes a storm drain filtration system which traps particulates such as suspended solids (TSS), oil and grease, soluble metals, organics and debris. Further, the project is consistent with the Regional Water Quality Control Board standards for storm water mitigation plans.

Due to these factors, staff believes that the proposed upgrade and new storm drain lines are consistent with the policies and objectives of the Local Coastal Program.

COMMISSION OR COMMITTEE REPORTS

The Redevelopment Advisory Committee (RAC) reviewed the project at its January 24, 2007, meeting and approved the project.

FISCAL IMPACT

The proposed project is estimated to cost $500,000 to be paid from the Redevelopment Drainage Improvement account (account No. 00591-818885).

CITY ATTORNEY'S ANALYSIS

Pursuant to Oceanside Zoning Ordinance Article 4102, the Commission is authorized to

hold a public hearing on this project's applications. Consideration of the project should be based on the evidence presented at the public hearing. After conducting the public hearing, the Commission shall approve, conditionally approve, or disapprove the project. The resolution has been reviewed and approved as to form by the City Attorney.

RECOMMENDATION

Staff recommends that the Commission adopt the resolution approving Regular Coastal Permit (RC-217-06) to upgrade and construct new storm drains generally located on Pacific and Myers streets between Seagaze Drive and Pier View Way.

PREPARED BY:

Shan Babick
Associate Planner

SUBMITTED BY:

Peter A. Weiss
Interim Executive Director

REVIEWED BY:

Michelle Skaggs Lawrence, Deputy City Manager
Kathy Baker, Redevelopment Manager
Mike Blessing, Deputy City Manager

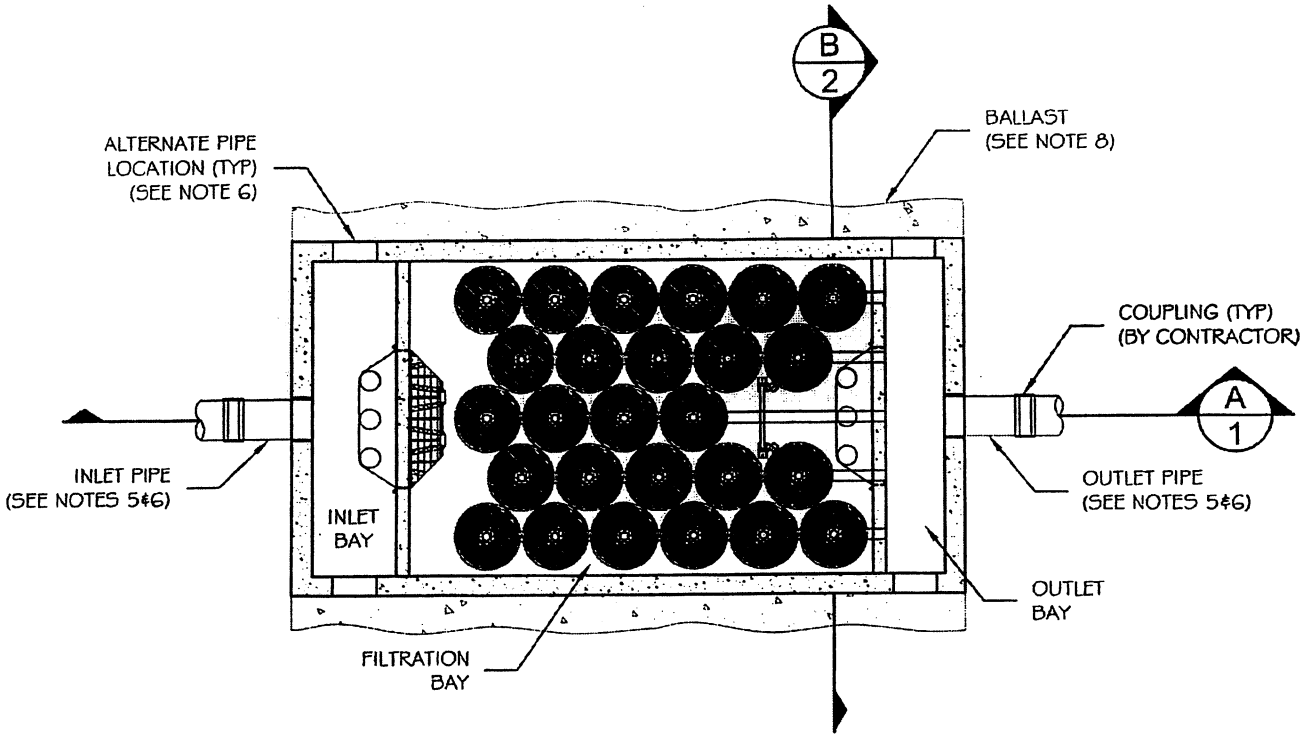

8' x 16' STORMFILTER - PLAN VIEW (1/1)

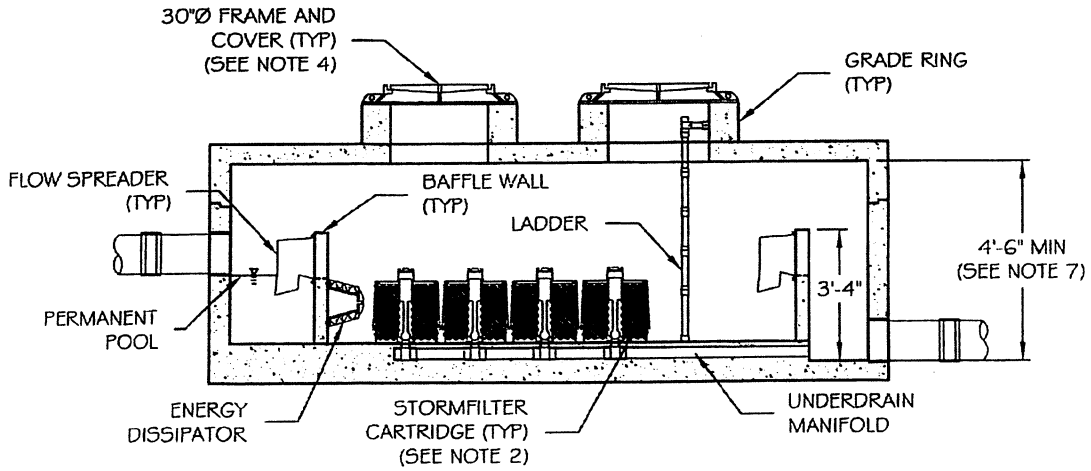

8' x 16' STORMFILTER - SECTION VIEW (A/1)

THE STORMWATER MANAGEMENT StormFilter®
U.S. PATENT No. 5,322,629, No. 5,707,527, No. 6,027,639 No. 6,649,048, No. 5,624,576, AND OTHER U.S. AND FOREIGN PATENTS PENDING

©2006 CONTECH Stormwater Solutions

CONTECH® STORMWATER SOLUTIONS
contechstormwater.com

8' x 16' PRECAST STORMFILTER
PLAN AND SECTION VIEWS
STANDARD DETAIL

DRAWING 1 1/2

DATE: 09/29/05	SCALE: NONE	FILE NAME: SF816-PC-DTL	DRAWN: MJW	CHECKED: ARG

GENERAL NOTES

1) STORMFILTER BY CONTECH STORMWATER SOLUTIONS; PORTLAND, OR (800) 548-4667; SCARBOROUGH, ME (877) 907-8676; ELKRIDGE, MD (866) 740-3318.
2) FILTER CARTRIDGE(S) TO BE SIPHON-ACTUATED AND SELF-CLEANING. STANDARD DETAIL DRAWING SHOWS MAXIMUM NUMBER OF CARTRIDGES. ACTUAL NUMBER REQUIRED TO BE SPECIFIED ON SITE PLANS OR IN DATA TABLE BELOW.
3) PRECAST VAULT TO BE CONSTRUCTED IN ACCORDANCE WITH ASTM C857 AND C858. DETAIL DRAWING REFLECTS DESIGN INTENT ONLY. ACTUAL DIMENSIONS AND CONFIGURATION OF STRUCTURE WILL BE SHOWN ON PRODUCTION SHOP DRAWING.
4) STRUCTURE AND ACCESS COVERS TO MEET AASHTO H-20 LOAD RATING.
5) STORMFILTER REQUIRES 2.3 FEET OF DROP FROM INLET TO OUTLET. IF LESS DROP IS AVAILABLE, CONTACT CONTECH STORMWATER SOLUTIONS.
6) INLET AND OUTLET PIPING TO BE SPECIFIED BY ENGINEER AND PROVIDED BY CONTRACTOR. PRECAST STORMFILTER VAULT EQUIPPED WITH EITHER CORED OPENINGS OR KNOCKOUTS AT INLET AND OUTLET LOCATIONS.
7) PROVIDE MINIMUM CLEARANCE FOR MAINTENANCE ACCESS. IF A SHALLOWER SYSTEM IS REQUIRED, CONTACT CONTECH STORMWATER SOLUTIONS FOR OTHER OPTIONS.
8) ANTI-FLOTATION BALLAST TO BE SPECIFIED BY ENGINEER AND PROVIDED BY CONTRACTOR, IF REQUIRED. BALLAST TO BE SET ALONG ENTIRE LENGTH OF BOTH SIDES OF THE STRUCTURE.
9) ALL STORMFILTERS REQUIRE REGULAR MAINTENANCE. REFER TO OPERATION AND MAINTENANCE GUIDELINES FOR MORE INFORMATION.

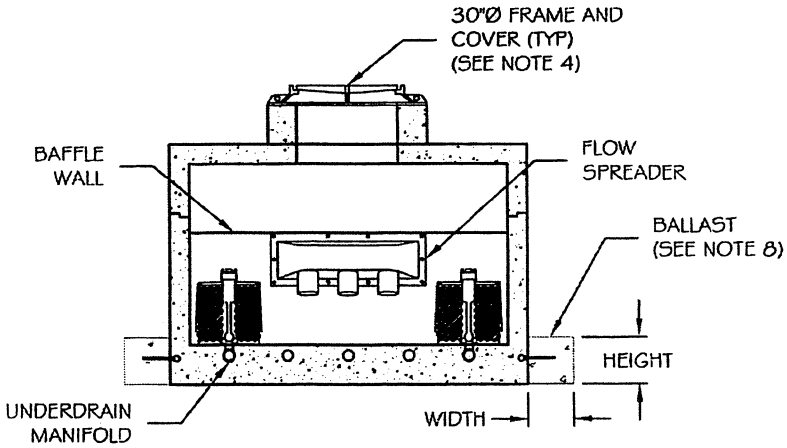

8' x 16' STORMFILTER - SECTION VIEW (B/2)

8' x 16' PRECAST STORMFILTER DATA

STRUCTURE ID	XXX
WATER QUALITY FLOW RATE (cfs)	X.XX
PEAK FLOW RATE (cfs)	X.XX
RETURN PERIOD OF PEAK FLOW (yrs)	XXX
# OF CARTRIDGES REQUIRED	XX
CARTRIDGE FLOW RATE (15 OR 7.5 gpm)	XX
MEDIA TYPE (CSF, PERLITE, ZPG)	XXXXX

PIPE DATA:	I.E.	MATERIAL	DIAMETER
INLET PIPE #1	XXX.XX'	XXX	XX"
INLET PIPE #2	XXX.XX'	XXX	XX"
OUTLET PIPE	XXX.XX'	XXX	XX"

RIM

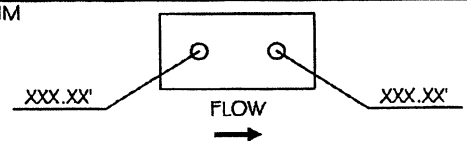

LADDER		YES/NO
ANTI-FLOTATION BALLAST	WIDTH	HEIGHT
	XX"	XX"

NOTES/SPECIAL REQUIREMENTS:

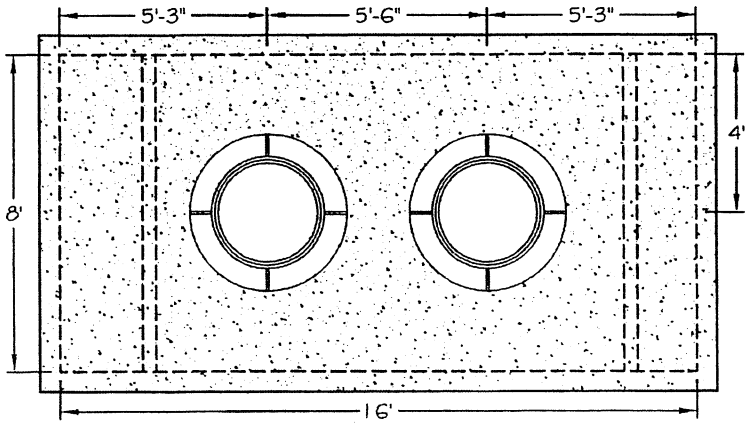

8' x 16' STORMFILTER - TOP VIEW (1/2)

THE STORMWATER MANAGEMENT StormFilter® U.S. PATENT No. 5,322,629, No. 5,707,527, No. 6,027,639 No. 6,649,048, No. 5,624,576, AND OTHER U.S. AND FOREIGN PATENTS PENDING

©2006 CONTECH Stormwater Solutions

CONTECH® STORMWATER SOLUTIONS
contechstormwater.com

8' x 16' PRECAST STORMFILTER
TOP AND SECTION VIEWS, NOTES AND DATA
STANDARD DETAIL

DRAWING 2 — 2/2

DATE: 09/29/05 | SCALE: NONE | FILE NAME: SF816-PC-DTL | DRAWN: MJW | CHECKED: ARG

PROJECT DESIGN CONSULTANTS | 701 B STREET, SUITE 800 SAN DIEGO, CA 92101 | 619.235.6471 TEL 619.234.0349 FAX | WWW.PROJECTDESIGN.COM

File: 3418.00C1
F06-769

November 2, 2006

Ms. Tracey Bohlen
CITY OF OCEANSIDE
300 North Coast Highway
Oceanside, CA 92054

SUBJECT: Change Order #1 – Additional Field Surveys and Utility Research

Dear Tracey:

As we discussed, we have attached a change order addressing requests for potholing information and additional field surveys.

POTHOLING OF EXISTING UTILITIES

We have contacted Underground Solutions about providing potholing services. We have worked with them in the past and they are familiar with the site. This scope includes air/vacuum excavation potholing of utilities surrounding blocks 16 and 17 of the project. Per our field visit, it appears there are approximately 18 – 22 pothole sites to be excavated. The following estimate is based on 20-sites. We will be potholing water, gas, SBC, Cox and electric utilities. The following is an estimate without encroachment permit or traffic control permits costs; these will need to be determined later if necessary. Perhaps, since this is a "City Project," those permits will be considered "no fee."

TIME-AND-MATERIALS $ 19,700

ADDITIONAL FIELD SURVEYS

We have included an additional two days of survey crew time and 16-hours of office support to facilitate collecting the potholing information and additional field surveys near the storm drain outfall. The additional field surveys in the vicinity of the outfall are necessary to precisely locate the light poles, large trees and other obstructions to assist us in relocating the existing storm drain line as it drops from Pacific Street to the beach.

FIXED FEE $ 4,900

TOTAL CHANGE ORDER NO. 1 $ 24,600

R:\WP\CONTRACT\3400\34180CO1.DOC

CONTRACT SUMMARY

Current Authorization	$24,800
Change Order No. 1	24,600
New Contract Amount	$49,400

If this change order is acceptable, please acknowledge by signing in the space provided below and return one signed original for our files.

Very truly yours,

Richard P Hall

Richard P. Hall, PE, CFM
Assistant Vice President

BUDGET CHANGE ORDER NO. 1
ACKNOWLEDGED AND ACCEPTED BY:

Jane McVey

Jane McVey Date
Director of Economic and Redevelopment

1-18-2007

Barry E. Martin Date
Interim City Manager

CITY OF OCEANSIDE
AMENDMENT NO. 2 TO
PROFESSIONAL SERVICES AGREEMENT

PROJECT: STORM DRAIN AND MYERS STREET IMPROVEMENTS

THIS AMENDMENT TO PROFESSIONAL SERVICES AGREEMENT (hereinafter "Amendment") is made and entered into this _____day of June, 2007, by and between the City of Oceanside, a municipal corporation, through its ECONOMIC DEVELOPMENT AND REDEVELOPMENT DEPARTMENT, hereinafter designated as "DEPARTMENT", and PROJECT DESIGN CONSULTANT, hereinafter designated as "CONSULTANT."

RECITALS

WHEREAS, DEPARTMENT and CONSULTANT are the parties to that certain Professional Services Agreement dated August 30, 2006, hereinafter referred to as the "Agreement", wherein CONSULTANT agreed to provide certain services to the DEPARTMENT as set forth therein;

WHEREAS, in January 2007, the parties entered into Amendment No. 1 to the Agreement to provide for changes and/or modifications to Section 1, Scope of Work and Section 7, Compensation in the additional amount of $24,600.

WHEREAS, the parties desire to enter into Amendment No. 2 to the Agreement to provide for changes and/or modifications to Section 1, Scope of Work and Section 7, Compensation.

AMENDMENT

NOW, THEREFORE, as set forth herein, the parties hereto do mutually agree that the Agreement shall be amended as follows:

1. Section 1, Scope of Work, shall be amended to reflect the revised scope of work as set forth in Exhibit "A" which is incorporated by reference."

2. Section 7, Compensation, shall be amended to reflect that all work performed in accordance with the Agreement dated August, 2006, shall not exceed the total contract price of $161,400. Reimbursment for travel, mileage, blueprinting, mylars, photocopying, plotting, faxes and other direct charges incurred on behalf of the City will be billed at cost plus 15%.

3. Except as expressly set forth in this Amendment No. **2**, the Agreement shall remain in full force and effect and is hereby ratified and reaffirmed.

SIGNATURES. The individuals executing this Amendment represent and warrant that they have the right, power, legal capacity and authority to enter into and to execute this Amendment on behalf of the respective legal entities of the CONSULTANT and the DEPARTMENT.

IN WITNESS WHEREOF the parties hereto being duly authorized on behalf of their respective entities to execute this Amendment, do hereby agree to the covenants contained in the Agreement, including this Amendment and have caused this Amendment to be executed by setting hereunto their signatures this _____ day of June, 2007.

PROJECT DESIGN CONSULTANT

By: _____
Greg Shields, PE, CEO

701 B Street
San Diego, CA 92101

95-3031092
Employer ID No.

By Lisa Lewack
Lisa Lewack
Vice President
701 B STREET, #800
San Diego, Ca. 92101

CITY OF OCEANSIDE
COMMUNITY DEVELOMPENT
COMMISSION

By: _____
Jane McVey, Economic Development & Redevelopment Director

APPROVED AS TO FORM:

_____, DCA
City Attorney

NOTARY ACKNOWLEDGMENTS OF CONSULTANT MUST BE ATTACHED.

(Revised 8-2004)

CALIFORNIA ALL-PURPOSE ACKNOWLEDGMENT

State of California
County of SAN DIEGO } ss.

On 6/1/07 (Date) before me, ANGELA R. WILLIAMS NOTARY PUBLIC, (Name and Title of Officer (e.g., "Jane Doe, Notary Public")) personally appeared GREGORY M. SHIELDS (Name(s) of Signer(s)),

☒ personally known to me
☐ proved to me on the basis of satisfactory evidence

to be the person(s) whose name(s) is/are subscribed to the within instrument and acknowledged to me that he/she/they executed the same in his/her/their authorized capacity(ies), and that by his/her/their signature(s) on the instrument the person(s), or the entity upon behalf of which the person(s) acted, executed the instrument.

ANGELA R. WILLIAMS
COMM. #1607331
Notary Public - California
San Diego County
My Comm. Expires Oct. 15, 2009
NRO1 NRO1

WITNESS my hand and official seal.

Angela R Williams
Signature of Notary Public

OPTIONAL

Though the information below is not required by law, it may prove valuable to persons relying on the document and could prevent fraudulent removal and reattachment of this form to another document.

Description of Attached Document

Title or Type of Document: CITY OF OCEANSIDE AMEND #2 TO PROF. SRV. AGRMNT
Document Date: 6/1/07 Number of Pages: 2
Signer(s) Other Than Named Above: LISA LEWECK

Capacity(ies) Claimed by Signer

Signer's Name: GREGORY M. SHIELDS

☐ Individual
☒ Corporate Officer — Title(s): CEO
☐ Partner — ☐ Limited ☐ General
☐ Attorney-in-Fact
☐ Trustee
☐ Guardian or Conservator
☐ Other:

Signer Is Representing: PROJECT DESIGN CONSULTANTS

RIGHT THUMBPRINT OF SIGNER
Top of thumb here

© 1999 National Notary Association • 9350 De Soto Ave., P.O. Box 2402 • Chatsworth, CA 91313-2402 • www.NationalNotary.org Prod. No. 5907 Reorder: Call Toll-Free 1-800-876-6827

PROJECT DESIGN CONSULTANTS | 701 B STREET, SUITE 800 SAN DIEGO, CA 92101 | 619.235.6471 TEL 619.234.0349 FAX | WWW.PROJECTDESIGN.COM

Exhibit "A"

File: 3418.00C
F07-216

April 17, 2007

Ms. Kathy Baker
CITY OF OCEANSIDE
300 North Coast Highway
Oceanside, CA 92054

SUBJECT: Change Order No. 2(R) – Storm Drain and Myers Street Improvements

Dear Kathy:

As discussed, we have attached a change order addressing requests for final engineering documents supporting construction of the proposed storm drain and Myers Street improvements.

This change order addresses final engineering efforts to replace the existing 18-inch RCP in Pacific Street and Pier View Way. In addition, street improvements will be designed to improve the drainage characteristics of Myers Street between Pier View Way and Seagaze Drive. The replacement pipe will extend from the existing bubbler outlet approximately 680-feet upstream to the Pacific Street/Mission Avenue intersection. A new storm drain main will extend up Pier View Way to Myers Street connecting into new inlets. The Myers Street improvements consist of: street widening, new storm drain inlets, a proposed joint utility trench and restriping of Myers Street. We do not anticipate that a raised median will be required. The major categories of civil engineering necessary to support these projects are: improvement plan preparation and processing, coordination, and construction administration. Traffic control plans are not included in this scope per Client direction. The services are described in detail below.

Construction plans for the traffic signal has been included as an optional item at the end of the attached scope. The traffic signal is required per the Traffic Impact Analysis report prepared by Linscott Law & Greenspan engineers dated January 2, 2007.

We have assumed that aerial topography used in preparing our April 2004 Drainage Report entitled *City of Oceanside Storm Drain Maintenance & Water Quality Improvements* in combination with field information already gathered will suffice for design efforts on this project. Therefore, this scope of work does not include obtaining new aerial topography or

perform additional field surveys. Additional survey work will be performed as extra work, with prior authorization. It is anticipated that all the proposed improvements will lie within the public right of way; therefore, no easement or legal preparations are anticipated. It is our understanding that the construction documents will utilize Record of Survey information to establish right-of-way, easements, and property lines.

I. PRELIMINARY ENGINEERING

A. Base/Master Drawing: This task includes creation of the electronic AutoCAD Master drawing file, which will incorporate the boundary, and aerial topography previously prepared by PDC, survey information, and horizontal layout of dry utilities based on dry utility consultant's mark-up. In addition, the base file will include proposed water, sewer and storm drain improvements. The proposed curb gutter, sidewalks, streets, driveways, and fire hydrants will also be included in the electronic base file. The base master drawing utility information will be generated from the aerial topography, field visits, City record research, and proposed public and private curb. This task includes curb and sidewalk design based on coordination with the architects and landscape architects for the OBR and the OMA projects.

FIXED FEE $ 5,000

B. Addendum to Hydrology Report: This task includes time to prepare a drainage addendum to the previously approved Drainage Report (April 2004) revising the Hydraulic Grade Line calculations to reflect the final storm drain profile shown on the construction drawings.

FIXED FEE $ 3,500

ITEM I TOTAL $ 8,500

II. CONSTRUCTION DOCUMENTS

A. Public Storm Drain and Street Improvement Plan: Preparation and processing of one set of public improvement plans at 1-inch = 20-foot scale for construction of new curb and gutter along both sides of Myers Street from Pier View Way to Seagaze Drive within the public right-of-way. The curb alignment will be based on the Encroachment Exhibit 01/19/2007. Myers Street will be widened as requested by the City of Oceanside. The specific horizontal alignment of the curb based on garage entrances, loading docks, corner pop-outs etc. will be based on proposed linework from the OMA and OBR projects approved by the City. This task excludes relocation of franchise utilities and appurtenances. PDC assumes that all back-of-curb final

improvements such as street trees, streetlights, and sidewalks will be designed and constructed by the OMA and OBR projects. This task includes improvement plans for connections of the adjacent future OMA and OBR projects to existing public water and sewer. Existing wet and franchise utility locations in the area have previously been located through a potholing process.

In addition, this task includes preparation of storm drain improvement plans for the proposed storm drain in Pier View Way and Myers Street, which will connect into new inlets along Myers Street. Storm drain alignment will be per City and Coastal Commission approvals. We anticipate using standard drawings and details for the improvements. This scope does not include time to design special junctions, channels, conveyance devices, or prepare structural calculations to support any details. We have assumed that the City will hire a Geotechnical consultant who will specify the appropriate pavement sections, backfill materials and methods and other Geotechnical considerations.

The construction drawings will consist of approximately nine sheets total, including title sheet, detail sheet, plan and profile sheets, and a curb usage/striping plan for Myers Street. We anticipate preparing the construction documents in three stages: 70%, 100%, and final approved document submittals. It is not anticipated that easement, right-of-way, or other mapping documents will be required. Traffic Control sheets are not included in this task.

FIXED FEE $ 42,000

B. Public Storm Drain and Street Improvement Plan Processing: Process public storm drain and street improvement plan as described in Task A. above. Includes meetings and phone calls with the City plan checkers to address plan check comments and discuss issues as necessary. Includes efforts to address City plan check comments and revise the CAD drawings as necessary, and to track the status of the plans. Excludes major revisions to the Public Improvement plans.

TIME-AND-MATERIALS $ 12,000

C. Public Storm Drain and Street Improvement Plan Technical Specifications: Prepare technical specifications for the storm drain improvements to accompany the plans. It is assumed that the specifications will only include technical specifications related to work shown on our plans; the City will prepare all other specifications. Specifications will be prepared using the Green Book format. If CSI format is desired, additional fees will apply.

FIXED FEE $ 6,000

D. Storm Water Pollution Prevention Plan: Preparation of a Storm Water Pollution Prevention Plan (SWPPP) addressing erosion and pollutant concerns during the construction process. The SWPPP will be prepared according to the requirements of the State of California permit in place at the time this scope was prepared. The SWPPP is intended to be a living document. This task does not include updates to the SWPPP resulting from construction activities or changes during construction. Water quality monitoring and sampling are not included.

FIXED FEE $ 7,000

E. Quantity Estimate: Prepare one quantity estimate to quantify the proposed improvements. This task does not include any costs of improvements.

FIXED FEE $ 3,500

ITEM II FIXED FEE	$ 58,500
ITEM II TIME-AND-MATERIALS	$ 12,000
ITEM II TOTAL	$ 72,500

III. COORDINATION MEETINGS AND PROJECT MANAGEMENT

A. Project Meetings and Management: Includes meetings with the City and coordination during the design development and construction document phases. Assumes one (1) PDC staff will be required to attend monthly project meetings (3-hours per meeting budgeted) for a 6-month duration. Also includes project management tasks such as updating project schedules, providing project status reports, and other miscellaneous project coordination items. These services will be provided on a time-and-materials basis in accordance with the attached hourly rates. Approximately 50-hours have been budgeted for this task.

TIME-AND-MATERIALS $ 7,500

B. Water and Sewer Coordination: Includes coordination with mechanical engineers for the OMA and OBR projects currently in review. PDC will include water and sewer connections in the right-of-way at locations obtained from the mechanical engineers and approved by the City of Oceanside. The location, design, and details of any backflow devices will not be included and are to be handled by the architects or mechanical engineers.

TIME-AND-MATERIALS $ 2,000

C. Franchise Utility Coordination: Provide coordination with franchise utility consultant. Includes plotting of proposed dry utilities as provided by the utility consultant onto the Public Storm Drain and Street Improvement plans. Includes any applicable dry utility conflict checks with the proposed public improvements. Also includes coordination on location of proposed dry utility trench in Myers Street. This scope does not include any major redesign as a result to changes to the proposed dry utility trench. It also does not include any dry utility permits. The dry utility consultant would prepare and process plans, coordinate, and obtain such permits.

TIME-AND-MATERIALS $ 3,500

ITEM III TOTAL $ 13,000

IV. CONSTRUCTION SUPPORT

A. Provide project visits upon request.

B. Assist contractor with questions related to the civil drawings.

C. Assist in responding to RFIs.

D. Assist in review of contractor submittals.

Time to respond to Items A through D will be provided at the contractual hourly rate. A total of 60-hours are budgeted for this effort.

ITEM IV TIME-AND-MATERIALS TOTAL $ 8,000

V. POST-CONSTRUCTION ENGINEERING

As-Built Services: Services include preparation of as-built drawings. A total of 90-hours are budgeted for this effort.

ITEM V. TIME-AND-MATERIALS $ 12,000

TOTAL FIXED FEE $ 67,000
TOTAL TIME-AND-MATERIALS $ 45,000
TOTAL CHANGE ORDER NO. 2(R) $ 112,000

CONTRACT SUMMARY

Current Authorization	$ 49,400
Change Order No. 2(R)	$112,000
New Contract Amount (incl. option, Item VI)	$161,400

If this change order is acceptable, please acknowledge by signing in the space provided below and return one signed original for our files.

Very truly yours,

Lisa Leweck

Lisa Leweck, PE
Vice President

BUDGET CHANGE ORDER NO. 2(R)
ACKNOWLEDGED AND ACCEPTED BY:

_____

Jane McVey Date
Director of Economic and Redevelopment

CITY OF OCEANSIDE

PROFESSIONAL SERVICES AGREEMENT

PROJECT: STORM DRAIN AND STREET IMPROVEMENTS - LINE 25B

THIS AGREEMENT is made and entered into this 22 day of August, 2006, by and between the CITY OF OCEANSIDE, a municipal corporation, hereinafter designated as "CITY", and PROJECT DESIGN CONSULTANTS, hereinafter designated as "CONSULTANT."

NOW THEREFORE, THE PARTIES MUTUALLY AGREE AS FOLLOWS:

1. **SCOPE OF WORK.** The project is more particularly described as follows: See the attached "Exhibit A."

2. **INDEPENDENT CONTRACTOR.** CONSULTANT'S relationship to the CITY shall be that of an independent contractor. CONSULTANT shall have no authority, express or implied, to act on behalf of the CITY as an agent, or to bind the CITY to any obligation whatsoever, unless specifically authorized in writing by the City Manager or his designee. The CONSULTANT shall not be authorized to communicate directly with, nor in any way direct the actions of, any bidder or the construction contractor for this project without the prior written authorization by the City Manager or his designee. CONSULTANT shall be solely responsible for the performance of any of its employees, agents, or subcontractors under this Agreement. CONSULTANT shall report to the CITY any and all employees, agents, and consultants performing work in connection with this project, and all shall be subject to the approval of the CITY.

3. **WORKER'S COMPENSATION.** Pursuant to Labor Code section 1861, the CONSULTANT hereby certifies that the CONSULTANT is aware of the provisions of Section 3700 of the Labor Code which require every employer to be insured against liability for Worker's Compensation or to undertake self-insurance in accordance with the provisions of that Code, and the CONSULTANT will comply with such provisions, and provide certification of such compliance as a part of this Agreement.

4. **LIABILITY INSURANCE.**

4.1. CONSULTANT shall, throughout the duration of this Agreement maintain comprehensive general liability and property damage insurance, or commercial general liability insurance, covering all operations of CONSULTANT, its agents and employees, performed in connection with this

STORM DRAIN AND STREET IMPROVEMENTS - LINE 25B

Agreement including but not limited to premises and automobile.

4.2 CONSULTANT shall maintain liability insurance in the following minimum limits:

<u>Comprehensive General Liability Insurance</u> (bodily injury and property damage)	
Combined Single Limit Per Occurrence	$ 1,000,000
General Aggregate	$ 2,000,000*
<u>Commercial General Liability Insurance</u> (bodily injury and property damage)	
General limit per occurrence	$ 1,000,000
General limit project specific aggregate	$ 2,000,000
<u>Automobile Liability Insurance</u>	$ 1,000,000

*General aggregate per year, or part thereof, with respect to losses or other acts or omissions of CONSULTANT under this Agreement.

4.3 If coverage is provided through a Commercial General Liability Insurance policy, a minimum of 50% of each of the aggregate limits shall remain available at all times. If over 50% of any aggregate limit has been paid or reserved, the CITY may require additional coverage to be purchased by the CONSULTANT to restore the required limits. The CONSULTANT shall also notify the CITY'S Project Manager promptly of all losses or claims over $25,000 resulting from work performed under this contract, or any loss or claim against the CONSULTANT resulting from any of the CONSULTANT'S work.

4.4 All insurance companies affording coverage to the CONSULTANT for the purposes of this Section shall add the City of Oceanside as "additional insured" under the designated insurance policy for all work performed under this agreement. Insurance coverage provided to the City as additional insured shall be primary insurance and other insurance maintained by the City of Oceanside, its officers, agents, and employees shall be excess only and not contributing with insurance provided pursuant to this Section.

4.5 All insurance companies affording coverage to the CONSULTANT pursuant to this agreement shall be insurance organizations admitted by the Insurance Commissioner of the State of California to transact business of insurance in the state or be rated as A+ or higher by A.M. Best.

4.6 All insurance companies affording coverage shall provide thirty (30) days written notice to the CITY should the policy be cancelled before the expiration date. For the purposes of this notice requirement, any material change in the policy prior to the expiration shall be considered a cancellation.

4.7 CONSULTANT shall provide evidence of compliance with the insurance requirements listed above by providing a Certificate of Insurance, in a form satisfactory to the City Attorney, concurrently with the submittal of this Agreement.

4.8 CONSULTANT shall provide a substitute Certificate of Insurance no later than thirty (30) days prior to the policy expiration date. Failure by the CONSULTANT to provide such a substitution and extend the policy expiration date shall be considered a default by CONSULTANT and may subject the CONSULTANT to a suspension or termination of work under the Agreement.

4.9 Maintenance of insurance by the CONSULTANT as specified in this Agreement shall in no way be interpreted as relieving the CONSULTANT of any responsibility whatsoever and the CONSULTANT may carry, at its own expense, such additional insurance as it deems necessary.

5. **PROFESSIONAL ERRORS AND OMISSIONS INSURANCE.** Throughout the duration of this Agreement and four (4) years thereafter, the CONSULTANT shall maintain professional errors and omissions insurance for work performed in connection with this Agreement in the minimum amount of ~~Two Hundred Fifty Thousand~~ Dollars (~~$250,000.00~~).
One Million $1,000,000.00 RPK

CONSULTANT shall provide evidence of compliance with these insurance requirements by providing a Certificate of Insurance.

6. **CONSULTANT'S INDEMNIFICATION OF CITY.** CONSULTANT shall indemnify and hold harmless the CITY and its officers, agents and employees against all claims for damages to persons or property arising out of the negligent acts, errors or omissions or wrongful acts of conduct of the CONSULTANT, or its employees, agents, subcontractors, or others in connection with the execution of the work covered by this Agreement, except for those claims arising from the willful misconduct, sole negligence or active negligence of the CITY, its officers, agents, or employees. CONSULTANT'S indemnification shall include any and all costs, expenses, attorneys' fees, expert fees and liability assessed against or incurred by the CITY, its officers, agents, or employees in defending against such claims or lawsuits, whether the same proceed to judgment or not. Further, CONSULTANT at its own expense shall, upon written request by the CITY, defend any such suit or

action brought against the CITY, its officers, agents, or employees resulting or arising from the conduct, tortuous acts or omissions of the CONSULTANT.

CONSULTANT'S indemnification of CITY shall not be limited by any prior or subsequent declaration by the CONSULTANT.

7. **COMPENSATION.** CONSULTANT'S compensation for all work performed in accordance with this Agreement, shall not exceed the total contract price of **$24,800** (twenty-four thousand eight hundred dollars.) Reimbursable for travel, mileage, blueprinting, mylars, photocopies, plotting, faxes and other direct charges incurred on behalf of the City will be billed at cost plus 15%.

   No work shall be performed by CONSULTANT in excess of the total contract price without prior written approval of the City Engineer. CONSULTANT shall obtain approval by the City Manager or his designee prior to performing any work, which results in incidental expenses to CITY.

   CONSULTANT shall submit monthly invoices to CITY. CITY shall make partial payments to CONSULTANT not to exceed the total contract price within thirty (30) days of receipt of invoice subject to approval by the Economic Development and Redevelopment Director.

8. **TIMING REQUIREMENTS.** Time is of the essence in the performance of work under this Agreement and the timing requirements shall be strictly adhered to unless otherwise modified in writing. All work shall be completed in every detail to the satisfaction of the City Manager or his designee within ninety (90) calendar days.

9. **TERMINATION OF AGREEMENT.** Either party may terminate this Agreement by providing thirty (30) days written notice of the other party.

   If any portion of the work is terminated or abandoned by the CITY, then the CITY shall pay CONSULTANT for any work completed up to and including the date of termination or abandonment of the Agreement. The CITY shall be required to compensate CONSULTANT for work performed in accordance with the Agreement up to and including the date of termination.

10. **ENTIRE AGREEMENT.** This Agreement comprises the entire integrated understanding between CITY and CONSULTANT concerning the work to be performed for this project and supersedes all prior negotiations, representations, or agreements.

11. **INTERPRETATION OF THE AGREEMENT.** The interpretation, validity and enforcement of the Agreement shall be governed by and construed under

the laws of the State of California. The Agreement does not limit any other rights or remedies available to CITY.

The CONSULTANT shall be responsible for complying with all local, state, and federal laws whether or not said laws are expressly stated or referred to herein.

Should any provision herein be found or deemed to be invalid, the Agreement shall be construed as not containing such provision, and all other provisions, which are otherwise lawful, shall remain in full force and effect, and to this end the provisions of this Agreement are severable.

12. **AGREEMENT MODIFICATION**. This Agreement may not be modified orally or in any manner other than by an agreement in writing signed by the parties hereto.

13. **SIGNATURES**. The individuals executing this Agreement represent and warrant that they have the right, power, legal capacity and authority to enter into and to execute this Agreement on behalf of the respective legal entities of the CONSULTANT and the CITY.

IN WITNESS WHEREOF the parties hereto for themselves, their heirs, executors, administrators, successors, and assigns do hereby agree to the full performance of the covenants herein contained and have caused this Professional Services Agreement to be executed by setting hereunto their signatures this 7 day of Sept., 2006.

PROJECT DESIGN CONSULTANTS

By: _____

Rex Plummer, L.S., President
701 B Street
San Diego, CA 92101
619-881-3229
619-234-0349 (Fax)

By: _____

Richard P Hall, P.E., Asst. V.P.
Same as Above

_____
Employer ID No.

CITY OF OCEANSIDE

By: _____

Jane Mcvey, Director of Economic & Redevelopment
300 North Coast Highway
Oceanside, CA 92054
760-435-3355

APPROVED AS TO FORM:

_____
City Attorney

NOTARY ACKNOWLEDGMENTS OF CONSULTANT MUST BE ATTACHED.

CALIFORNIA ALL-PURPOSE ACKNOWLEDGMENT

State of California
County of SAN DIEGO } ss.

On 9/7/06 (Date) before me, ANGELA R WILLIAMS, (Name and Title of Officer (e.g., "Jane Doe, Notary Public")

personally appeared REX PLUMMER, (Name(s) of Signer(s))

☒ personally known to me
☐ proved to me on the basis of satisfactory evidence

to be the person(s) whose name(s) is/are subscribed to the within instrument and acknowledged to me that he/she/they executed the same in his/her/their authorized capacity(ies), and that by his/her/their signature(s) on the instrument the person(s), or the entity upon behalf of which the person(s) acted, executed the instrument.

ANGELA R. WILLIAMS
COMM. #1607331
Notary Public - California
San Diego County
My Comm. Expires Oct. 15, 2009
NRO1 NRO1

WITNESS my hand and official seal.

Angela R Williams
Signature of Notary Public

OPTIONAL

Though the information below is not required by law, it may prove valuable to persons relying on the document and could prevent fraudulent removal and reattachment of this form to another document.

Description of Attached Document

Title or Type of Document: _____

Document Date: _____ Number of Pages: _____

Signer(s) Other Than Named Above: _____

Capacity(ies) Claimed by Signer

Signer's Name: _____

☐ Individual
☐ Corporate Officer — Title(s): _____
☐ Partner — ☐ Limited ☐ General
☐ Attorney-in-Fact
☐ Trustee
☐ Guardian or Conservator
☐ Other: _____

Signer Is Representing: _____

RIGHT THUMBPRINT OF SIGNER
Top of thumb here

© 1999 National Notary Association • 9350 De Soto Ave., P.O. Box 2402 • Chatsworth, CA 91313-2402 • www.NationalNotary.org Prod. No. 5907 Reorder: Call Toll-Free 1-800-876-6827

EXHIBIT 'A' – SUMMARY SCOPE OF WORK
STORM DRAIN AND STREET IMPROVEMENTS
LINE 25B
CITY OF OCEANSIDE, CALIFORNIA

Project Design Consultants (PDC) proposes to provide the following services:

I. CONCEPTUAL STORM DRAIN AND STREET IMPROVEMENTS

This Scope of Work for conceptual storm drain and street improvements is based on conversations between the City of Oceanside and Project Design Consultants (PDC). This project proposes to replace the existing 18-inch RCP in Pacific Street and Pier View Way. In addition, street improvements are necessary to improve the drainage characteristics of Myers Street between Pier View Way and Seagaze Drive. The replacement pipe will extend from the existing bubbler outlet approximately 680-feet upstream to the Pacific Street Mission Avenue intersection. A new storm drain lateral will extend up Pier View Way to Myers Street connecting into new inlets along Myers Street. The Myers Street improvements will consist of street improvements to facilitate minor grading changes, a street widening, and new storm drain inlets. We do not anticipate that a raised median will be required. The major categories of civil engineering necessary to support this project are: conceptual improvement plan preparation and graphics/meeting support.

Outlined below is our understanding of the services we believe will be required.

II. RESEARCH AND INVESTIGATION

A. Data Collection and Review:

1. *Project Kick-off Meeting*: A kick-off meeting will be held to review the project goals, approach, and schedule. Issues regarding design criteria, organizational structure, data management, and data transfer will be discussed. This meeting will also allow the City to brief us on upcoming projects and/or projects currently under review that may pose vertical or horizontal conflicts.

2. *Existing Facilities Inventory*: We will research the existing wet utilities infrastructure and enhance our base mapping of the area. We strongly recommend potholing in the vicinity of the new storm drain pipes. We have included in this scope time to coordinate with an underground utility specialist. However, we have assumed that the City would perform utility mark-outs and potholing.

B. Survey and Control:

Field Survey: We have assumed that aerial topography used in preparing our April 2004 Drainage Report entitled, *City of Oceanside Storm Drain Maintenance & Water Quality Improvements,* will suffice for design efforts on this project. Therefore, this Scope of Work does not include obtaining new aerial topography. We have included two days of survey crew time to revisit the site and obtain additional field completion data based on the team's research. This information will include cross sections of Myers Street. Additional survey work will be performed as extra work, with prior authorization. It is anticipated that all the proposed improvements will lie within the public right-of-way, therefore, no easement or legal preparations are anticipated. It is our understanding that the construction documents will utilize Record of Survey information to establish right-of-way, easements, and property lines.

III. CONCEPTUAL DESIGN

We anticipate preparing improvement plans to a 30% level of completion to support discussions with the Coastal Commission. These plans will include a horizontal layout of the proposed improvements and will show the existing infrastructure. We will also prepare an Engineer's Estimate of Probable Construction Cost. We anticipate that profiles, specifications, details, and other supporting information will be prepared at a later time.

Prior to starting engineering design, we understand that the City will confirm wet and franchise utility locations through a potholing process. This information will be critical to avoiding conflicts as we anticipate the underground storm drain will be laid at a shallow slope.

The 30% plans will consist of approximately four, 40-scale sheets total, including plan sheets and a title page. This task also includes time to prepare preliminary Hydraulic Grade Line calculations to reflect a proposed storm drain profile. While a drainage addendum to the previously approved Drainage Report (April 2004) reflecting final HGL calculations will be performed at a later time, obtaining the potholing information and preparing hydraulic calculations prior to speaking to the Coastal Commission will help prevent needing to modify the design at a later date to account for utility conflicts or necessary pipe size changes, potentially requiring us to revisit the Coastal Commission approval process.

A. Water Quality Technical Report: We will prepare a Water Quality Technical Report (WQTR) to identify pollutants and conditions of concern, establish feasible options for permanent stormwater BMPs at this project site, and identify implementation and maintenance procedures for post-construction BMPs. The WQTR will be developed in accordance with the current requirements and standards from the City of Oceanside.

B. Meetings and Project Coordination: We have budgeted 20 hours of staff time to attend project meetings and assist in project coordination.

C. Graphics Support: We have budgeted 20 hours of staff time to assist the City with the preparation of graphics.

The scope includes the following deliverables:

1. Conceptual Design: Five copies of the 30% plans and WQTR.

IV. REIMBURSABLES

Reimbursable charges for blueprinting, photographic mylar reproductions, photocopying, travel and mileage, delivery services, telephone charges, computerized plotting, special graphic services, supplies, facsimiles, and other direct charges incurred on behalf of the Client will be billed to Client at cost plus 15%.

EXCLUSIONS

The following services are excluded from this scope. Certain tasks may be provided under a separate scope, amendment, or time-and-materials basis.

1. The projected hours described in this Agreement are based on normal and reasonable review processing. Should any of the applications experience design or environmental issues that require significant redesign, the budget described in this Agreement may require adjustment. Additional hours beyond those referenced will be conducted as extras to the Agreement and will be charged on a time-and-materials basis.
2. This Scope of Work assumes that all environmental approvals have been obtained or will be performed by others. Preparation of documents and other efforts to support environmental processing or Coastal Commission approval in excess of the hours budgeted within this proposal will be conducted as extras to the Agreement and will be charged on a time-and-materials basis.
3. Traffic control plans and signing/striping plans are not included.
4. Title reports and title documents will be done by others.
5. Soils or Geotechnical engineering will be done by others.

6. Potholing of existing utilities is not included.
7. Appraisals and right-of-way negotiations are not included.
8. Bid documents are not included.
9. Construction staking, monumentation, and as-built drawings will be in a separate contract.
10. Landscape architecture is not included.
11. Others will obtain NPDES permit.
12. Services to design shoring, retaining walls, or other structures not covered in the San Diego Regional Standard Drawings can be provided separately, if required.
13. Services to prepare gas, electrical, cable, and/or telephone plans or relocations are done by others.
14. Exhibits for agency and permit processing, other than those specifically described in this Scope of Work, are not included.
15. Detention analysis and design are not included.
16. Design of interim drainage facilities is not included.
17. Traffic studies, signal plans, and street lighting analyses/plans are not included, but can be provided, if required, upon approval of a change order.