ITEM NO. 18

STAFF REPORT

CITY OF OCEANSIDE

DATE: February 13, 2008

TO: Honorable Mayor and Members of the City Council

FROM: Development Services Department/Planning Division

SUBJECT: **CONSIDERATION OF A GENERAL PLAN AMENDMENT, ZONE AMENDMENT, DEVELOPMENT PLAN, CONDITIONAL USE PERMITS AND VARIANCES TO CHANGE THE LAND USE AND ZONING DESIGNATION FROM SINGLE-FAMILY DETACHED RESIDENTIAL TO COMMERCIAL GENERAL AND TO ALLOW THE CONSTRUCTION OF A MINI-MART, CARWASH AND RENOVATION OF AN EXISTING SERVICE STATION LOCATED AT THE SOUTHEAST CORNER OF CAROLYN CIRCLE AND MISSION AVENUE – MOHSEN MISSION AVENUE – APPLICANT: MOHSEN AND SUSANA ARABSHAHI**

SYNOPSIS

Staff recommends approval of the proposed General Plan Amendment (GPA-4-07) and Zone Amendment (ZA-3-03) to change the land designation from Single-Family Detached (RS) and Commercial Limited (CL) to Commercial General (CG); Development Plan (D-11-03) for the development and improvements to the entire service station site; Conditional Use Permits (C-29-06, C-18-07, C-19-07) for the construction of a 2,725-square-foot mini-mart and a 756-square-foot automated drive-through car wash, and the operation of a service station; and Variance (V-5-07, V-6-07) to permit seven striped parking stalls and to permit less than 50 percent of the required setback area to be landscaped. Staff recommends that the City Council adopt a resolution approving the General Plan Amendment to change the land designation from Single-Family Detached and Commercial Limited to Commercial General and introduce an ordinance amending the zoning district map.

BACKGROUND

The site is located within the Airport neighborhood at the southeast corner of Mission Avenue and Carolyn Circle. The site exists with an older service station and vehicle service garage that was constructed in 1963. The surrounding area consists of the San Luis Rey Estates single-family subdivision to the south and west, industrial and

commercial uses to the north, a vacant parcel to the east and the La Mision mixed-use development to the northeast of the site. The applicant has applied for a General Plan Amendment, Zone Amendment, Development Plan, Conditional Use Permits and Variances to permit the proposed developments to allow a drive-through car wash, two-story mini-mart and additional improvements.

Staff recommended approval to the Planning Commission. The Planning Commission reviewed the current request at their December 17, 2007, meeting. They recommended by a vote of 6-0 that the City Council approve the Mitigated Negative Declaration and requested land use changes, development plan, conditional use permits, variances and zone text change.

The project description includes the following key elements:

General Plan Amendment (GPA-4-07) represents a request for the following:

To change the General Plan designation of the 6,114-square-foot Parcel (146-061-01) for conformance with the neighboring property and existing use. The existing General Plan Designation is Single-Family Dwelling-Residential (SFD-R) and is currently a part of the Mohsen service station facility. The land use change will allow the existing use to be in conformance with the Commercial General land use designation. The General Plan Amendment will allow the land use designation to be in conformance with the General Commercial Designation and the existing use.

Zone Amendment (ZA-3-03) represents a request for the following:

A request to allow the zoning designation to change from the Single-Family Residential (RS) to conform to the adjoining parcel's Commercial General (CG) designation. The proposed Zoning Amendment will permit the existing service station that is divided by the zoning district boundaries to be in conformance with Commercial General (CG) zoning designation and uses.

Development Plan (D-11-03) represents a request for the following:

The applicant is requesting to demolish the existing vehicle service building and attached retail suite and to construct a two-story 2,725-square-foot mini-mart with an associated restaurant, second-story office, two new gas pump canopies, additional landscaping, a 757-square-foot automatic drive-through car wash and an associated 134-square-foot equipment room. The development will encompass several improvements to the site such as additional landscape areas in and around the property, a trash enclosure as designed by City of Oceanside standards, new exterior pole lighting, relocation of the existing propane tank, a new North County Transit District pedestrian waiting bench and shelter, block walls, new signage, repaving of the site and provision of additional parking stalls. The service pumps have been recently replaced in the past year and will remain and function as a part of this plan.

The proposed mini-mart will be situated at the south rear corner of the lot and the drive-through car wash will occupy the southeast corner of the property. Access to the facility will occur at the west and northeast portions of the site, and all traffic will be one-way toward the east portion of the site. The drive-through car wash will maintain the required 5-car stacking as per the requirement of the Oceanside Zoning Ordinance.

The proposed building structure and canopies' architectural design, colors, material and details are intended to complement and enhance the property and surrounding neighborhood. The proposed architecture is contemporary and the building materials consist of wood and stucco. The proposed design includes tempered clear glass and masonry pilasters, and stucco wall coverings mixed with aluminum trim will complement the building. Exterior colors are French vanilla with sierra tan trim details. The applicant has taken into account the residential neighborhood to the south and has provided certain design features such as orientating the lights and activity areas towards the street and not directly facing the neighborhood. Development of the sound walls to mitigate the possible noise that could be produced by the drive-through car wash will be provided for additional noise mitigation. The new structures and improvements will architecturally enhance the property and will complement the neighborhood.

Staff has analyzed the parking demand based on the operation hours and the peak activity hours per use and found that the parking provided shall meet the needs for the proposed development. The project signage will be in conformance with Oceanside Zoning Ordinance regulations and will require approval from the Planning Division.

Conditional Use Permit (C-18-07) represents a request for the following:

The proposed remodel and new construction of the service station constitutes a revision to the existing Conditional Use Permit. The facility was constructed in 1963 and since then no Conditional Use Permits were filed or required for the use. The service station is currently operating under the classification of a legal non-conforming use or grandfathered use. Since the applicant is requesting discretionary permits and approvals, the property is now subject to a new Conditional Use Permit for the operation and use of a service station.

Conditional Use Permit (C-29-06) represents a request for the following:

To allow the construction and use of a two-story 2,725-square-foot mini-mart with a 831-square-foot second-story office. The sales of merchandise and preparation of food will occupy the first floor, and the second floor will consist of a storage room, office and affiliated restroom. The hours of operation and use of the service station will be 24 hours a day and will be subject to the Conditional Use Permit regulations.

Conditional Use Permit (C-19-07) represents a request for the following:

The construction and use of a 756-square-foot automated drive-through car wash and a 134-square-foot equipment room. The drive-through will allow the required five-vehicle stacking as per the Oceanside Zoning Ordinance.

Variance (V-2-07) represents a request for the following:

The encroachment into the corner side yard and interior setback area with the proposed structures. The required corner side yard setback for the property is 10 feet and the proposed gasoline dispenser canopies will encroach approximately three feet within the required 10-foot corner side yard setback and six feet into the required 15-foot interior yard setback. The proposed mini-mart will also encroach into the required 15-foot rear yard setback with a zero lot line development.

Variance (V-5-07) represents a request for the following:

A 10-foot minimum landscaped setback is required by the Zoning Ordinance along Mission Avenue and Carolyn Circle. At least 50 percent of each required setback area must be landscaped. The project meets the required minimum site landscaping of 10 percent, but does not meet the required 50 percent of landscaping needed for each setback area, due to existing configuration of lot.

Variance (V-6-07) represents a request for the following:

The applicant requests seven striped parking stalls which is below the required 15 parking stalls, pursuant to Section 3100.

The applicant is proposing seven striped stalls and 16 parking spaces at the gasoline pumps. The gasoline spaces are not designated striped spaces and the applicant is requesting to take the 16 spaces into account for additional provided parking.

ANALYSIS

The proposed General Plan Land Use Map designation on the subject property is Commercial Limited (CL) and Single Family Residential (RS). The existing service station is not compatible with the existing land use and zoning designation and the proposed change will enable conformance with the land use and the proposed use. The remodel of the existing service station and proposed land use change will provide uses that are needed for the surrounding neighborhood and complement the adjoining uses. The following table provides comparisons with adjacent development.

Land Use compatibility with surrounding developments

Location	General Plan	Zoning	Land Use
Subject Property:	SFD-R	CL & RS	Residential
North of the site	CG	CL & RS	Commercial
East of the site	LI	IL	Vacant
South of the site	SFD-R	RS	Residential
West of the site	SFD-R	RS	Residential

The applicant proposes to continue the use of the service station with major improvements and developments to the site. The service station, mini-mart, and drive-through car wash will provide the neighborhood with the needed commercial uses that shall encourage redevelopment and commercial activity to the area.

A Negative Declaration has been prepared for the project pursuant to the provisions of the California Environmental Quality Act (CEQA), which finds that there will not be a significant adverse impact upon the environment with approval of the proposed land use and zone text changes.

FISCAL IMPACT

The applicant has paid application fees for the processing of the General Plan and Zone Amendments.

COMMISSION OR COMMITTEE REPORT

On December 17, 2007, the Planning Commission considered the proposed amendments. After hearing public testimony the Planning Commission recommended approval of the amendments on a 6-to-0 vote. The Planning Commission modified the hours of operation of the carwash to 6 a.m. to 9 p.m. and the mini-mart retail sales hours to 24 hours daily.

CITY ATTORNEY'S ANALYSIS

The City Council, under the provisions of Section 65356 of the Government Code, has the ability to amend the General Plan by resolution. The Planning Commission's public hearing on December 17, 2007, and its recommendation of approval were in accord with the provisions of Section 65353 of the Government Code.

After conducting the public hearing, the Council shall affirm, modify, or reject the Planning Commission's recommendation. A modification not previously considered by the Commission shall be referred to the Commission for review and action as appropriate.

RECOMMENDATION

Staff recommends approval of the proposed General Plan Amendment (GPA-4-07) and Zone Amendment (ZA-3-03) to change the land designation from Single-Family Detached (RS) and Commercial Limited (CL) to Commercial General (CG); Development Plan (D-11-03) for the development and improvements to the entire service station site; Conditional Use Permits (C-29-06, C-18-07, C-19-07) for the construction of a 2,725-square-foot mini-mart and a 756-square-foot automated drive-through car wash, and the operation of a service station; and Variance (V-5-07, V-6-07) to permit seven striped parking stalls and to permit less than 50 percent of the required setback area to be landscaped. Staff recommends that the City Council adopt a resolution approving the General Plan Amendment to change the land designation from Single-Family Detached and Commercial Limited to Commercial General and introduce an ordinance amending the zoning district map.

PREPARED BY

Scott Nightingale
Planner II

SUBMITTED BY

Peter A. Weiss
City Manager

REVIEWED BY:

Michelle Skaggs Lawrence, Deputy City Manager
Lauren Wasserman, Interim Development Services Director
Jerry Hittleman, City Planner

ATTACHMENTS:

1. City Council Resolution
2. City Council Ordinance
3. Map
4. Planning Commission Resolution No. 2007-P68
5. Planning Commission Staff Report dated December 17, 2007
6. Mitigated Negative Declaration

RESOLUTION NO.

A RESOLUTION OF THE CITY COUNCIL OF THE CITY OF OCEANSIDE APPROVING A DEVELOPMENT PLAN, CONDITIONAL USE PERMITS AND VARIANCES FOR RENOVATION OF AN EXISTING GAS STATION TO INCLUDE A CONVENIENCE STORE AND CARWASH LOCATED AT THE SOUTHEAST CORNER OF MISSION AVENUE AND CAROLYN CIRCLE IN THE AIRPORT NEIGHBORHOOD

(Applicant: Mohsen and Susana Arabshahi)

WHEREAS, an application for a Development Plan (D-11-03), Conditional Use Permits (C-15-03, C-18-07, C-19-07) and Variances (V-2-07, V-5-07, V-6-07) to construct a convenience store and carwash and remodel to an existing gas station on a 0.5 acre of the site a located at the southeast corner of Mission Avenue and Carolyn Circle;

WHEREAS, on December 17, 2007, the Planning Commission of the City of Oceanside, after giving the required notice conduct a duly advertised public hearing as prescribed by law to consider said application, has adopted Resolution No. 2007-P68 recommending approval of Development Plan (D-11-03), Conditional Use Permits (C-15-03, C-18-07, C-19-07) and Variances (V-2-07, V-18-07, V-19-07).

WHEREAS, on February 13, 2008, the City Council held a duly noticed public hearing and heard and considered written evidence and oral testimony by all interested parties on the above identified, Development Plan (D-11-03), Conditional Use Permits (C-15-03, C-18-07, C-19-07) and Variances (V-2-07, V-18-07, V-19-07) application;

WHEREAS, pursuant to the California Environmental Quality Act of 1970, and State Guidelines thereto; a Mitigated Negative Declaration has been prepared stating that if the mitigation measures are met there will not be an adverse impact upon the environment;

WHEREAS, there is hereby imposed on the subject development project certain fees, dedications, reservations and other exactions pursuant to state law and city ordinance;

WHEREAS, pursuant to Gov't Code §66020(d)(1), NOTICE IS HEREBY GIVEN that the project is subject to certain fees, dedications, reservations and other exactions as provided below:

Description	Authority for Imposition	Current Estimate Fee or Calculation Formula
Parkland Dedication/Fee	Ordinance No. 91-10 Resolution No. 06-R0334-1	$3,503 per unit

Description	Authority for Imposition	Current Estimate Fee or Calculation Formula
Drainage Fee	Ordinance No. 85-23 Resolution No. 06-R0334-1	Depends on area (range is $2,843-$15,964 per acre)
Public Facility Fee	Ordinance No. 91-09 Resolution No. 06-R0334-1	$2,072 per unit for residential
School Facilities Mitigation Fee	Ordinance No. 91-34	$2.63 per square foot residential
Traffic Signal Fee	Ordinance No. 87-19 Resolution No. 06-R0334-1	$15.71 per vehicle trip
Thoroughfare Fee (For commercial and industrial please note the 75 percent discount)	Ordinance No. 83-01 Resolution No. 06-R0334-1	$255 per vehicle trip (based on SANDAG trip generation table available from staff and from SANDAG)
Water System Buy-in Fees	Oceanside City Code §37.56.1 Resolution No. 87-96 Ordinance No. 05-OR 0611-1	Fee based on water meter size. Residential is typically $4,395 per unit.
Wastewater System Buy-in fees	Oceanside City Code § 29.11.1 Resolution No. 87-97 Ordinance No. 05-OR 0610-1	Based on capacity or water meter size. Residential is typically $6,035 per unit.
San Diego County Water Authority Capacity Fees	SDCWA Ordinance No. 2005-03	Based on meter size. Residential is typically $4,154 per unit.
Inclusionary housing in lieu fees—Residential only.	Chapter 14-C of the City Code	$1,000 per development project + $100 per unit plus $10,275 per unit

WHEREAS, the current fees referenced above are merely fee amount estimates of the impact fees that would be required if due and payable under currently applicable ordinances and resolutions, presume the accuracy of relevant project information provided by the applicant, and are not necessarily the fee amount that will be owing when such fee becomes due and payable;

WHEREAS, unless otherwise provided by this resolution, all impact fees shall be calculated and collected at the time and in the manner provided in Chapter 32B of the Oceanside City Code and the City expressly reserves the right to amend the fees and fee calculations consistent with applicable law;

WHEREAS, the City expressly reserves the right to establish, modify or adjust any fee, dedication, reservation or other exaction to the extent permitted and as authorized by law;

WHEREAS, pursuant to Gov't Code §66020(d)(1), NOTICE IS FURTHER GIVEN that the 90-day period to protest the imposition of any fee, dedication, reservation, or other exaction described in this resolution begins on the effective date of this resolution and any such protest must be in a manner that complies with Section 66020;

WHEREAS, pursuant to Oceanside Zoning Ordinance §4603, this resolution becomes effective 10 days from its adoption in the absence of the filing of an appeal or call for review;

WHEREAS, the Mitigated Negative Declaration together with any comments received, and Mitigation and Monitoring and Reporting Program (MMRP) incorporated into the conditions of approval for the project, were presented to the City Council, and the City Council reviewed and considered the information contained in these documents prior to making a decision on the project.

WHEREAS, the Mitigated Negative Declaration and Mitigation and Monitoring and Reporting Program (MMRP) have been determined to be accurate and adequate documents, which reflect the independent judgment and analysis of the City Council. On the basis of the entire record before it, the City Council finds that there is no substantial evidence that the project, with implementation of the mitigation measures proposed, will have a significant impact on the environment.

WHEREAS, the documents or other material which constitute the record of proceedings upon which the decision is based will be maintained by the City of Oceanside Planning Department, 300 North Coast Highway, Oceanside, California 92054.

WHEREAS, studies and investigations made by this Commission and in its behalf reveal the following facts:

FINDINGS:

For the Development Plan (D-11-03):

1. The site plan and physical design of the project is consistent with the purposes of the Zoning Ordinance, including Articles 11, 30, and 43 with the exemption of the required Variances.

2. The Development Plan conforms to the General Plan of the City of Oceanside, including the goals and objectives of Community Development Sections 2.23, 1.22, and 1.23 the Land Use Element of the General Plan.

3. The area covered by the Development Plan can be adequately, reasonably and conveniently served by existing and planned public services, utilities, and public facilities.

4. The service station, mini-mart and car wash compatible with the existing and potential development on adjoining properties and the surrounding Airport Neighborhood.

For the Conditional Use Permit (C-29-06):

1. The construction and remodel of the existing gas station conforms to the General Plan of the City of Oceanside, including the goals and objectives of Community Development Sections 2.0, 2.02, 2.3, and 2.32 the Land Use Element of the General Plan.

2. The proposed car wash, convenience store and remodel to the existing gas station will not be detrimental to the public health, safety or welfare of the persons residing or working in or adjacent to the neighborhood and will not be detrimental to properties or improvements in the vicinity or to the general welfare of the City.

3. The proposed remodel to the existing gas station, new convenience store and car wash facility will provide a desirable service to residents in the surrounding neighborhood. The use is consistent with the land use policies and the neighborhood.

4. The gas station's existing perimeter walls and proposed landscaping will provide additional screening and sound buffering to the adjoining neighbors. The existing gas station, proposed car wash and convenience store, as conditioned, will not result in a detrimental situation to the residential neighborhood to the south, or to the surrounding land uses within the vicinity of the site.

For the Conditional Use Permit (C-18-07):

1. The construction and use of the two story 2,725 square foot convenience store will not be detrimental to properties or improvements in the vicinity or to the general welfare of the City.

2. The location of the mini-mart, within the proposed Commercial general (CG) zone is in accord with the objectives of the Zoning Ordinance and the purposes of the district in which the site is located, with the exception of the proposed Variances.

///

3. The proposed use will not be detrimental to properties or improvements in the vicinity or to the general welfare of the City.

4. The convenience store is conditioned and is required to comply with all provisions of the Zoning Ordinance. The proposed use is subject to specific operational conditions that will cause the use to operate compatibly with the surrounding land uses.

For the Conditional Use Permit (C-19-07):

1. The proposed 756-square foot automated drive-through car wash location of the carwash, within the CG commercial zone is in accord with the objectives of the Zoning Ordinance and the purposes of the district in which the site is located.

2. The proposed use will not be detrimental to properties or improvements in the vicinity or to the general welfare of the City. The limited hours-of-operation (6:00 a.m. to 9:00 p.m.) in conjunction with the construction of the noise "wings", the carwash dryer with the noise reduction proposed, including roll-up doors, and other acoustical improvements described in the acoustical analysis and materials submitted in support of this application the impact to adjacent uses would be limited.

3. The carwash is conditioned and is required to comply with all provisions of the Zoning Ordinance and Noise Ordinance. The proposed use is subject to specific operational conditions that will cause the use to operate compatibly with the surrounding land uses.

For the Variance (V-2-07):

1. The encroachment into the required 10-foot corner side yard and 15-foot interior setback areas is consistent with similar commercial properties along Mission Avenue and within the Airport Neighborhood. The irregular/narrow lot configuration and existing service pump locations warrants consideration and granting of the variance request. The strict applications of the requirements of the Zoning Ordinance deprive such property of privileges enjoyed by other property in the vicinity and under identical zoning classification.

2. As such, granting the variance for the proposed reduced setback will not be detrimental or injurious to property or improvements in the vicinity of the development site, or to the public health, safety or general welfare.

3. The granting of the reduction in setbacks will not constitute a grant of special privilege inconsistent with limitations on other properties in the vicinity and in the same zoning district.

For the Variance (V-5-07):

1. A 10-foot minimum landscaped setback is required by the zoning ordinance along Mission Avenue and Carolyn Circle. At least 50 percent of each required setback area must be landscaped and the project proposes an approximate percentage of 40 percent landscaping within the setback areas. The project shall meet the minimum landscape requirements and the existing lot constraints and unique lot configuration warrant the requested Variance for the 40 percent landscaping within the required setback areas.
2. The proposed 40 percent landscaping within the required setback will not be out-of-character with existing developments in the vicinity. The neighborhood consist of older commercial developments with little to no landscaping and the proposed 40 percent landscaping in the required setback areas is warrant due to the surrounding neighborhood. The granting of the variance for the required reduced setback landscaping percentage will not be detrimental or injurious to property or improvements in the vicinity of the development site, or to the public health, safety or general welfare.
3. The granting of the reduction in the percentage of landscaping in the required setbacks will not constitute a grant of special privilege inconsistent with limitations on other properties in the vicinity and in the same zoning district.

For the Variance (V-6-07):

1. The applicant has requested to permit seven striped parking stalls that are below the required 15 parking stalls, pursuant the zoning ordinance section 3100. The lot constraints and existing service pumps locations limit areas for additional parking stall. The limited purchasing time of products in the convenience store and temporary parking areas at the service pumps will adversely impact the site and will not require additional parking. As such, granting the Variance for the proposed reduction in parking stalls will not be detrimental or injurious to property or improvements in the vicinity of the development site, or to the public health, safety or general welfare.
2. Special circumstances or conditions applicable to the development site, including size, shape, topography, location and surroundings warrant the granting of the variance. The granting of the reduction in parking stalls will not constitute a grant of special privilege inconsistent with limitations on other properties in the vicinity and in the same zoning district.

3. Granting of the Variance is consistent with the purpose of the Zoning Ordinance and will not constitute a grant of special privilege inconsistent with limitations on other properties in the vicinity and in the same zoning district. The unique lot configuration, placement of the existing service pumps and limited usages of the site by patrons warrants the reduction in the required parking stalls.

NOW, THEREFORE, BE IT RESOLVED that the City Council does hereby approve the Mitigated Negative Declaration and adopt the mitigation measures provided therein of Development Plan (D-11-03), Conditional Use Permits (C-29-06, C-18-07, C-19-07) and Variances (V-2-07, V-5-07, V-6-07) subject to the following conditions:

FOR THE MOHSEN MISSION AVENUE:

Building:

1. Applicable Building Codes and Ordinances shall be based on the date of submittal for Building Division plan check. (Currently the 2001 California Code of Regulations, and 2004 California Electrical Code)
2. The granting of approval under this action shall in no way relieve the applicant/project from compliance with all State and Local building codes.
3. Site development, parking, access into buildings and building interiors shall comply with the State's Disabled Accessibility Regulations. (2001 California Building Code (CBC), Chapter 11B).
4. The building plans for this project are required by State law to be prepared by a licensed architect or engineer and must be in compliance with this requirement prior to submittal for building plan review.
5. All electrical, communication, CATV, etc. service lines within the exterior lines of the property shall be underground (City Code Sec. 6.30).
6. All outdoor lighting must comply with Chapter 39 of the City Code (Light Pollution Ordinance). Where color rendition is important, high-pressure sodium, metal halide or other such lights may be utilized and shall be shown on building and electrical plans.
7. Compliance with the Federal Clean Water Act (BMP's) must be demonstrated on the plans.

///

8. The developer shall monitor, supervise and control all building construction and supporting activities so as to prevent these activities from causing a public nuisance, including, but not limited to, strict adherence to the following:

   a) Building construction work hours shall be limited to between 7:00 a.m. and 6:00 p.m. Monday through Friday, and on Saturday from 7:00 a.m. to 6:00 p.m. for work that is not inherently noise-producing. Examples of work not permitted on Saturday are concrete and grout pours, roof nailing and activities of similar noise-producing nature. No work shall be permitted on Sundays and Federal Holidays (New Year's Day, Memorial Day, July 4th, Labor Day, Thanksgiving Day, Christmas Day) except as allowed for emergency work under the provisions of the Oceanside City Code Chapter 38 (Noise Ordinance).

   b) The construction site shall be kept reasonably free of construction debris as specified in Section 13.17 of the Oceanside City Code. Storage of debris in approved solid waste containers shall be considered compliance with this requirement. Small amounts of construction debris may be stored on-site in a neat, safe manner for short periods of time pending disposal.

9. Separate/unique addresses will/may be required to facilitate utility releases. Verification that the addresses have been properly assigned by the City's Planning Division must accompany the Building Permit application.

10. A complete Soils Report, Structural Calculations, & Energy Calculations/documentation will be required at time of plans submittal to the Building Division for plan check.

11. If this project is submitted after Jan. 1, 2008 it must meet the requirements of the newly adopted ICC codes.

Fire Prevention:

12. A minimum fire flow of 1500 gallons per minute shall be provided.

13. In accordance with the California Fire Code Sec. 901.4.4, approved address for commercial, industrial, and residential occupancies shall be placed on the structure in such a position as to be plainly visible and legible from the street or roadway fronting the property. Numbers shall be contrasting with their background.

14. Submit a copy of as built plans on a CD for all projects on the job site before final occupancy.

15. Buildings shall meet Oceanside Fire Department's current codes at the time of building permit application.

16. Future development of the property will require compliance with all applicable Fire Department Standards.

Engineering:

17. For the demolition of any existing structures or surface improvements, grading plans shall be submitted and erosion control plans be approved by the City Engineer prior to the issuance of a demolition permit. No demolition shall be permitted without an approved erosion control plan.

18. If the project involves demolition of an existing structure or surface improvements, the grading plans shall be submitted and erosion control plans be approved by the City Engineer prior to the issuance of a demolition permit. No demolition shall be permitted without an approved erosion control plan.

19. Vehicular access rights to Mission Avenue and Carolyn Circle Drive shall be relinquished to the City from all this lot, except the proposed driveways as shown on the site plan.

20. All right-of-way alignments, street dedications, exact geometrics and widths shall be dedicated and improved as required by the City Engineer.

21. Design and construction of all improvements shall be in accordance with standard plans, specifications of the City of Oceanside and subject to approval by the City Engineer.

22. Prior to issuance of a building permit all improvement requirements shall be covered by a development agreement and secured with sufficient improvement securities or bonds guaranteeing performance and payment for labor and materials, setting of monuments, and warranty against defective materials and workmanship.

23. Prior to issuance of a building permit a phasing plan (if any) for the construction of public and private improvements including landscaping, shall be approved by the City Engineer.

24. The developer shall provide public street dedication as required to serve the property.

25. The approval of the project shall not mean that closure, vacation, or abandonment of any public street, right-of-way, easement, or facility is granted or guaranteed to the developer. The developer is responsible for applying for all closures, vacations, and abandonments as necessary. The application(s) shall be reviewed and approved or rejected by the City of Oceanside under separate process (es) per codes, ordinances, and policies in effect at the time of

the application.

26. A construction-phasing plan (if applicable) for the construction of on-site public and private improvements shall be reviewed and approved by the City Engineer prior to the issuance of any grading or improvement permits. Prior to the issuance of any building permits all offsite or frontage improvements including landscaping and any required streets or arterials shall be under construction to the satisfaction of the City Engineer. All improvements shall be completed prior to issuance of any certificates of occupancy.

27. Where proposed off-site improvements, including but not limited to slopes, public utility facilities, and drainage facilities, are to be constructed, the applicant shall, at his own expense, obtain all necessary easements or other interests in real property and shall dedicate the same to the City of Oceanside as required. The applicant shall provide documentary proof satisfactory to the City of Oceanside that such easements or other interest in real property have been obtained prior to issuance of any grading, building or improvement permit for the project. Additionally, the City of Oceanside, may at its sole discretion, require that the applicant obtain at his sole expense a title policy insuring the necessary title for the easement or other interest in real property to have vested with the City of Oceanside or the applicant, as applicable.

28. Prior to the issuance of a grading permit, the developer shall notify and host a neighborhood meeting with all of the area residents located within 300 feet of the project site, and residents of property along any residential streets to be used as a "haul route", to inform them of the grading and construction schedule, haul routes, and to answer questions.

29. The developer shall monitor, supervise and control all construction and construction-supportive activities, so as to prevent these activities from causing a public nuisance, including but not limited to, insuring strict adherence to the following:

a) Dirt, debris and other construction material shall not be deposited on any public street or within the City's stormwater conveyance system.

b) All grading and related site preparation and construction activities shall be limited to the hours of 7:00 a.m. to 6:00 p.m., Monday through Friday. No engineering related construction activities shall be conducted on Saturdays, Sundays or legal holidays unless written permission is granted by the City Engineer with specific limitations to the working hours and types of permitted operations. All on-site construction staging areas shall be as

far as possible (minimum 100 feet) from any existing residential development. Because construction noise may still be intrusive in the evening or on holidays, the City of Oceanside Noise Ordinance also prohibits "any disturbing excessive or offensive noise which causes discomfort or annoyance to reasonable persons of normal sensitivity."

c) The construction site shall accommodate the parking of all motor vehicles used by persons working at or providing deliveries to the site.

d) A haul route shall be obtained at least 7 days prior the start of hauling operations and must be approved by the City Engineer. Hauling operations shall be 8:00 a.m. to 3:30 p.m. unless approved otherwise.

30. A traffic control plan shall be prepared according to the City traffic control guidelines and be submitted to and approved by the City Engineer prior to the start of work within open City rights-of-way. Traffic control during construction of streets that have been opened to public traffic shall be in accordance with construction signing, marking and other protection as required by the Caltrans Traffic Manual and City Traffic Control Guidelines. Traffic control plans shall be in effect from 8:00 a.m. to 3:30 p.m. unless approved otherwise.

31. Approval of this development project is conditioned upon payment of all applicable impact fees and connection fees in the manner provided in chapter 32B of the Oceanside City Code. All drainage fees, traffic signal fees and contributions, highway thoroughfare fees, park fees, reimbursements, and other applicable charges, fees and deposits shall be paid prior to recordation of the map or the issuance of any building permits, in accordance with City Ordinances and policies. The developer shall also be required to join into, contribute, or participate in any improvement, lighting, or other special district affecting or affected by this project. Approval of the tentative map (project) shall constitute the developer's approval of such payments, and his agreement to pay for any other similar assessments or charges in effect when any increment is submitted for final map or building permit approval, and to join, contribute, and/or participate in such districts.

32. Mission Avenue and Carolyn Circle Drive shall be improved with curbs and gutters and sidewalks.

33. Mission Avenue and Carolyn Circle Drive shall provide a minimum of 10 feet parkway between the face of curb and the right-of-way line. Sidewalk improvements shall comply with ADA requirements.

34. Relocate the existing bus stop to the satisfaction of the North County Transit District (NCTD).

35. Sight distance requirements at the project driveways along Mission Avenue and Carolyn Circle shall conform to the corner sight distance criteria as provided by SDRSD DS-20A and or DS-20B.

36. Streetlights shall be maintained and installed on all public streets per City Standards. The system shall provide uniform lighting, and be secured prior to occupancy. The developer shall pay all applicable fees, energy charges, and/or assessments associated with City-owned (LS-2 rate schedule) streetlights and shall also agree to the formulation of, or the annexation to, any appropriate street lighting district.

37. The Geotechnical Consultant shall review the foundation/grading/site work plans to ascertain that plans are in conformance with the recommendations contained in their Geotechnical Report.

38. Prior to approval of the grading plans, the developer shall contract with a geotechnical engineering firm to perform a field investigation of the existing pavement on all streets adjacent to the project boundary. The limits of the study shall be half-street plus 12 feet along the project's frontage. The field investigation shall include a minimum of one pavement boring per every 50 linear feet of street frontage. Should the existing AC thickness be determined to be less than three inches or without underlying Class II base material, the developer shall remove and reconstruct the pavement section as determined by the pavement analysis submittal process detailed in Item No. 2 below.

39. Upon review of the pavement investigation, the City Engineer shall determine whether the developer shall: 1) Repair all failed pavement sections, header cut and grind per the direction of the City Engineer, and construct a two-inch thick rubberized AC overlay; or 2) Perform R-value testing and submit a study that determines if the existing pavement meets current City standards/traffic indices. Should the study conclude that the pavement does not meet current requirements, rehabilitation/mitigation recommendations shall be provided in a pavement analysis report, and the developer shall reconstruct the pavement per these recommendations, subject to approval by the City Engineer.

40. Mission Avenue and Carolyn Circle Drive shall be improved as required the City Engineer.

///

41. Pavement sections for all streets, alleys, driveways and parking areas shall be based upon approved soil tests and traffic indices. The pavement design is to be prepared by the developer's soil engineer and must be approved by the City Engineer, prior to paving.

42. Any existing broken pavement, concrete curb, gutter or sidewalk or any damaged during construction of the project, shall be repaired or replaced as directed by the City Engineer.

43. The undergrounding of the existing overhead utilities may be deferred. The developer shall pay an in-lieu fee, based upon the length of utilities to be placed underground, and at the rate in effect at building permit issuance or as established by the City Engineer per Section 901.G. of the Subdivision Ordinance (R91-166) and as required by the City Engineer and current City policy.

44. The developer shall comply with all the provisions of the City's cable television ordinances including those relating to notification as required by the City Engineer.

45. The developer shall install two-inch PVC conduit, together with 1/4-inch pull-rope and pull-boxes at 400 feet intervals for future signal interconnect cable on all arterial-level or above, streets.

46. Grading and drainage facilities shall be designed and installed to adequately accommodate the local stormwater runoff and shall be in accordance with the City's Engineers Manual and as directed by the City Engineer.

47. The applicant shall obtain any necessary permits and clearances from all public agencies having jurisdiction over the project due to its type, size, or location, including but not limited to the U. S. Army Corps of Engineers, California Department of Fish & Game, U. S. Fish and Wildlife Service and/or San Diego Regional Water Quality Control Board (including NPDES), San Diego County Health Department, prior to the issuance of grading permits.

48. Prior to any grading of any part of the tract or project, a comprehensive soils and geologic investigation shall be conducted of the soils, slopes, and formations in the project. All necessary measures shall be taken and implemented to assure slope stability, erosion control, and soil integrity. No grading shall occur until a detailed grading plan, to be prepared in accordance with the Grading Ordinance and Zoning Ordinance, is approved by the City Engineer.

49. This project shall provide year-round erosion control including measures for the site required for the phasing of grading. Prior to the issuance of grading permit, an erosion control plan, designed for all proposed stages of construction, shall be reviewed, secured by the applicant with cash

securities and approved by the City Engineer.

50. A precise grading and private improvement plan shall be prepared, reviewed, secured and approved prior to the issuance of any building permits. The plan shall reflect all pavement, flatwork, landscaped areas, special surfaces, curbs, gutters, medians, striping, and signage, footprints of all structures, walls, drainage devices and utility services. Parking lot striping and any on-site traffic calming devices shall be shown on all Precise Grading and Private Improvement Plans.

51. Landscaping plans, including plans for the construction of walls, fences or other structures at or near intersections, must conform to intersection sight distance requirements. Landscape and irrigation plans shall be approved by the City Engineer prior to the issuance of occupancy permits, and a pre-construction meeting held, prior to the start of any improvements.

52. Landscaping plans, including plans for the construction of walls, fences or other structures at or near intersections, must conform to intersection sight distance requirements. Landscape and irrigation plans for disturbed areas must be submitted to the City Engineer prior to the issuance of a preliminary grading permit and approved by the City Engineer prior to the issuance of occupancy permits. Frontage and median landscaping shall be installed prior to the issuance of any certificates of occupancy. Any project fences, sound or privacy walls and monument entry walls/signs shall be shown on, bonded for and built from the landscape plans. These features shall also be shown on the precise grading plans for purposes of location only. Plantable, segmental walls shall be designed, reviewed and constructed by the grading plans and landscaped/irrigated through project landscape plans. All plans must be approved by the City Engineer and a pre-construction meeting held, prior to the start of any improvements.

53. The drainage design on the project is conceptual only. The final design shall be based upon a hydrologic/hydraulic study to be approved by the City Engineer during final engineering. All drainage picked up in an underground system shall remain underground until it is discharged into an approved channel, or as otherwise approved by the City Engineer. All public storm drains shall be shown on City standard plan and profile sheets. All storm drain easements shall be dedicated where required. The applicant shall be responsible for obtaining any off-site easements for storm drainage facilities.

///

54. Storm drain facilities shall be designed and located such that the inside travel lanes on streets with collector or above design criteria shall be passable during conditions of a 100-year frequency storm.

55. Sediment, silt, grease, trash, debris, and/or pollutants shall be collected on-site and disposed of in accordance with all state and federal requirements, prior to stormwater discharge either off-site or into the City drainage system.

56. The development shall comply with all applicable regulations established by the United States Environmental Protection Agency (USEPA) as set forth in the National Pollutant Discharge Elimination System (NPDES) permit requirements for urban runoff and stormwater discharge and any regulations adopted by the City pursuant to the NPDES. Regulations or requirements. Further, the applicant may be required to file a Notice of Intent with the State Water Resources Control Board to obtain coverage under the NPDES. General Permit for Storm Water Discharges Associated with Construction Activity and may be required to implement a Storm Water Pollution Prevention Plan (SWPPP) concurrent with the commencement of grading activities. SWPPPs include both construction and post construction pollution prevention and pollution control measures and identify funding mechanisms for post construction control measures. The developer shall comply with all the provisions of the Clean Water Program during and after all phases of the development process, including but not limited to: mass grading, rough grading, construction of street and landscaping improvements, and construction of dwelling units. The applicant shall design the Project's storm drains and other drainage facilities to include Best Management Practices to minimize non-point source pollution, satisfactory to the City Engineer.

57. Upon acceptance of any fee waiver or reduction by the developer, the entire project will be subject to prevailing wage requirements as specified by Labor Code section 1720(b)(4). The developer shall agree to execute a form acknowledging the prevailing wage requirements prior to the granting of any fee reductions or waivers.

58. The developer shall prepare and submit an Operations & Maintenance (O&M) Plan to the City Engineer with the first submittal of engineering plans. The O&M Plan shall be prepared by the applicant's Civil Engineer. It shall be directly based on the project's Storm Water Mitigation Plan (SWMP) previously approved by the project's approving authority

(Planning Commission/City Council). At a minimum the O&M Plan shall include the designated responsible parties to manage the stormwater BMP(s), employee's training program and duties, operating schedule, maintenance frequency, routine service schedule, specific maintenance activities, copies of resource agency permits, cost estimate for implementation of the O&M Plan and any other necessary elements.

59. The developer shall enter into a City-Standard Stormwater Facilities Maintenance Agreement with the City obliging the project proponent to maintain, repair and replace the Storm Water Best Management Practices (BMPs) identified in the project's approved Storm Water Mitigation Plan (SWMP), as detailed in the O&M Plan into perpetuity. The Agreement shall be approved by the City Attorney prior to issuance of any precise grading permit and shall be recorded at the County Recorder's Office prior to issuance of any building permit. Security in the form of cash (or certificate of deposit payable to the City) or an irrevocable, City-Standard Letter of Credit shall be required prior to issuance of a precise grading permit. The amount of the security shall be equal to 10 years of maintenance costs, as identified by the O&M Plan. The applicant's Civil Engineer shall prepare the O&M cost estimate.

60. At a minimum, maintenance agreements shall require the staff training, inspection and maintenance of all BMPs on an annual basis. The project proponent shall complete and maintain O&M forms to document all maintenance activities. Parties responsible for the O&M plan shall retain records at the subject property for at least five years. These documents shall be made available to the City for inspection upon request at any time.

61. The Agreement shall include a copy of executed on-site and off-site access easements necessary for the operation and maintenance of BMPs that shall be binding on the land throughout the life of the project to the benefit of the party responsible for the O&M of
BMPs, until such time that the storm water BMP requiring access is replaced, satisfactory to the City Engineer. The agreement shall also include a copy of the O&M Plan approved by the City Engineer.

62. The BMPs described in the project's approved Storm Water Mitigation Plan (SWMP) shall not be altered in any way, shape or form without formal approval by either an Administrative Substantial Conformance issued by the Development Services Department/Planning Division or the project's final approving authority (Planning Commission/City Council) at a public hearing.

The determination of whatever action is required for changes to a project's approved SWMP shall be made by the Development Services Department/Planning Division.

63. The approval of the project shall not mean that closure, vacation, or abandonment of any public street, right-of-way, easement, or facility is granted or guaranteed to the developer. The developer is responsible for applying for all closures, vacations, and abandonments as necessary. The application(s) shall be reviewed and approved or rejected by the City of Oceanside under separate process (es) per codes, ordinances, and policies in effect at the time of the application.

64. Prior to approval of the grading/improvement plans the applicant shall have a clearance letter from the County of San Diego Health Department, Hazardous Materials Division stating that the site is suitable for its intended use and has mitigated any existing hazardous materials."

Planning:

65. This Development Plan (D-11-03), Conditional Use Permits (C-29-06, C-18-07, C-19-07) and Variances (V-2-07, V-5-07, V-6-07) approvals shall lapse two years after the effective date of approval.

a) Unless a grading permit has been issued and grading has been substantially completed and or a building permit has bee issued, and construction diligently pursued; or an occupancy permit has been issued; or

b) Unless a time extension is granted by the Planning Commission.

c) The Development Plan (D-11-03) shall be effective for an additional 24 months from the date of recordation of the Final Map.

66. This Development Plan (D-11-03) approves only the construction of two gasoline canopies, a mini-mart, drive through carwash and additional improvements as shown on the plans and exhibits presented to the Planning Commission for review and approval. No deviation from these approved plans and exhibits shall occur without Planning Division approval. Substantial deviations shall require a revision to the Development Plan (D-11-03) or a new Development Plan.

67. This Conditional Use Permit shall be called for review by the Planning Commission if complaints are filed and verified as valid by the City Planner or the Code Enforcement Officer concerning the

violation of any of the approved conditions or the project assumptions demonstrated under the application approval.

68. A covenant or other recordable documents approved by the City Attorney shall be prepared by the property owner and recorded prior to the issuance of a building permit. The covenant shall provide that the property is subject to this resolution, and shall generally list the conditions of approval.

69. Prior to the transfer of ownership and or operation of the site the owner shall provide a written copy of the applications, staff report and resolutions for the project to the new owner and or operator. This notification's provision shall run with the life of the project and shall be recorded as a covenant on the property.

70. Failure to meet any conditions of approval for this development shall constitute a violation of the Development Plan and Conditional Use Permits.

71. Unless expressly waived, all current zoning standards and City ordinances and policies in effect at the time building permits are issued are required to be met by this project. The approval of this project constitutes the property owner's and developer's agreement with all statements in the Description and Justification, and other materials and information submitted with this application, unless specifically waived by an adopted condition of approval.

72. The developer is prohibited from entering into any agreement with a cable television franchisee of the City, which gives such franchisee exclusive rights to install, operate, and or maintain its cable television system in the development.

73. The property owner, permittee or any successor-in-interest shall defend, indemnify and old harmless the City of Oceanside, its agents, officers or employees from any claim, action or proceeding against the City, its agents, officers, or employees to attack, set aside, void or annul an approval of the City, concerning Development Plan (D-11-03), Conditional Use Permits (C-15-03, C-18-07, C-19-07) and Variances (V-2-07, V-5-07, V-6-07). The City will promptly notify the property owner of any such claim, action or proceeding against the City and will cooperate fully in the defense. If the City fails to promptly notify the applicant of any such claim action or proceeding or fails to cooperate fully in the defense, the applicant shall not, thereafter, be responsible to defend, indemnify or hold harmless the City.

///

74. All landscaping, fences, walls, etc. on the site, in medians in the public right-of-way and in any adjoining public parkways shall be permanently maintained by the owner, his assigns or any successors-in-interest in the property. The maintenance program shall include normal care and irrigation of the landscaping; repair and replacement of plant materials; irrigation systems as necessary; and general cleanup of the landscaped and open areas, parking lots and walkways, walls, fences, etc. Failure to maintain landscaping shall result in the City taking all appropriate enforcement actions by all acceptable means including but not limited to citations and/or actual work with costs charged to or recorded against the owner. This condition shall be recorded with the covenant required by this resolution.

75. Landscape plans meeting the criteria of the City of Oceanside Guidelines and Specifications for Landscape Developments 1985, addenda 1997, Xeriscape Principles; Article V, Chapter 37, Water Conservation Ordinance No. 91-15, comply with Zoning Ordinance and shall be reviewed and approved by the City Engineer prior to the issuance

of building permits. Landscaping shall not be installed until bonds have been posted, fees paid, and plans signed for final approval. The following special landscaping requirements shall be met:

a) Street trees shall be located 30'-0" on center; the palm trees shall be a minimum eight-foot brown trunk height, the Cassia leptophylla shall be 24-inch box size. Right-of-way trees and understory landscape shall be irrigated and maintained by the owner of the property in perpetuity to meet the satisfaction of the City Engineer.

b) The street canopy tree shall be Cassia leptophylla and the on-site trees Pistachia chinensis.

c) Landscape plans shall match all plans affiliated with the project and comply with SWMP requirements.

77. The hours-of-operation for the Carwash will be limited to 6:00 a.m. to 9:00 p.m. everyday.

78. The hours-of-operation for retail sales within the mini-mart will be twenty four hours and will be subject to review by the Planning Commission if complaints are evident.

Mitigation Measures:

79. The equipment for inside the car wash shall be clearly identified on the plans before building permit submittal. The equipment proposed is the Ryko Ultrasonic 2001 wash system with

automatic bi-fold doors and shall be maintained and replaced if needed.

80. The car wash bay shall be equipped with Ryko bi-fold doors shall be equipped with appropriate seals at the perimeters such that minimal sound will penetrate to the exterior. A brush type seals shall be avoided. The doors shall be synchronized such that they do not open until all machinery is completely idle.

81. The support equipment associated with car wash machinery compressor shall be housed inside the mechanical equipment room attached to the car wash shell, with no direct vents to the outside which would allow noise emissions.

82. The car wash shell shall contain no vents, gaps, penetrations or other openings that will allow noise to penetrate to the exterior of the shell.

83. The existing perimeter wall shall be raised to the height of the car wash bay at both the entrance and exit to the bay, sloping down to its existing height over a distance of about twenty feet. A new construction wall with these characteristics may be installed in lieu of modifying the existing perimeter wall.

84. Failure to meet any conditions of approval for this development shall constitute a violation of the Development Plan, Conditional Use Permits and Variances.

85. Unless expressly waived, all current zoning standards and City ordinances and policies in effect at the time building permits are issued are required to be met by this project. The approval of this project constitutes the applicant's agreement with all statements in the project Description and Justification and other materials and information submitted with this application, unless specifically waived by an adopted condition of approval.

86. The final design and construction of the facility shall be in accordance with the plans representing the approved project and the conditions of approval. These requirements shall be shown and demonstrated on the plans submitted for grading permits and shall be reviewed and approved by the City Planner prior to the issuance of building permits.

87. Prior to the issuance of building permits, compliance with the applicable provisions of the City's anti-graffiti (Ordinance No. 93-19/Section 20.25 of the City Code) shall be reviewed and approved by the Planning Division. These requirements, including the obligation to remove or

cover with matching paint all graffiti within 24 hours, shall be noted on the Landscape Plan and shall be recorded in the form of a covenant affecting the subject property.

88. No metallic and/or reflective paints or surfaces shall be permitted.

89. All signage shall be in accordance with the plans representing the approved project. The signage shall be shown on the plans submitted for building permits and shall be reviewed and approved by the City Planner prior to the issuance of building permits.

Water Utilities:

90. The developer will be responsible for developing all water and sewer utilities necessary to develop the property. Any relocation of water and/or sewer utilities is the responsibility of the developer and shall be done by an approved licensed contractor at the developer's expense.

91. The developer will be responsible for developing all water and sewer utilities necessary to develop the property. Any relocation of water and/or sewer utilities is the responsibility of the developer and shall be done by an approved licensed contractor at the developer's expense.

92. The property owner will maintain private water and wastewater utilities located on private property.

93. Water services and sewer laterals constructed in existing right-of-way locations are to be constructed by approved and licensed contractors at developer's expense.

94. All Water and Wastewater construction shall conform to the most recent edition of the Water, Sewer, and Reclaimed Water Design and Construction Manual or as approved by the Water Utilities Director.

95. All public water and/or sewer facilities not located within the public right-of-way shall be provided with easements sized according to the Water, Sewer, and Reclaimed Water Design and Construction Manual. Easements shall be constructed for all weather access.

96. No trees, structures or building overhang shall be located within any water or wastewater utility easement.

97. A separate irrigation meter and approved backflow prevention device is required and shall be displayed on the plans.

98. If a property goes through a zone change and an increase in density occurs, a water and sewer study must be prepared by the developer at the developer's expense, and reviewed and approved by the Water Utilities Department.

99. An Inspection Manhole, described by the Water, Sewer, and Reclaimed Water Design and Construction Manual, shall be installed in each building sewer lateral and the location shall be called out on the approved Improvement Plans.

100. A Grease, Oil, and Sand Interceptor, described by the Uniform Plumbing Code, relating to garages and wash racks shall be installed in each building sewer in an appropriate location and shall be maintained by the property owner. The location shall be called out on the approved Improvement Plans.

101. If a restaurant or food service tenant occupies the property; a Grease, Oil, and Sand Interceptor shall be installed in each building sewer in an appropriate location and shall be maintained by the property owner. The location shall be called out on the approved Building Plans.

PASSED AND ADOPTED by the City Council of the City of Oceanside, California, this _____day of _____, 2008 by the following vote:

AYES:

NAYS:

ABSENT:

ABSTAIN:

_____
MAYOR OF THE CITY OF OCEANSIDE

ATTEST:

_____
CITY CLERK

APPROVED AS TO FORM:

_____
CITY ATTORNEY

RESOLUTION NO.

A RESOLUTION OF THE CITY COUNCIL OF THE CITY OF OCEANSIDE APPROVING A GENERAL PLAN AMENDMENT (GPA-4-07) CERTAIN REAL PROPERTY LOCATED SOUTHEAST CORNER OF MISSION AVENUE AND CAROLYN CIRCLE

(Applicant: Mohsen and Susana Arabshahi)

WHEREAS, an application for a General Plan Amendment (GPA-4-07) and Zone Amendment (ZA-3-03) has been submitted to amend the Land Use Element of the General Plan to change the land use designation on a .49 acre site from Commercial Limited and Single-Family Detached Residential to Commercial General located southeast of Mission Avenue and Carolyn Circle.

WHEREAS, on December 17, 2007, after a duly noticed public hearing, the Planning Commission found the proposed Commercial General Designation to be consistent to the General Plan and Zoning Ordinance.

WHEREAS, on February 13, 2008 the City Council held a duly noticed public hearing and heard and considered written evidence and oral testimony by all interested parties on the above identified GPA-4-07;

WHEREAS, The Planning Division has reviewed the proposed project for compliance with the California Environmental Quality Act (CEQA) and has conducted an Initial Study in accordance with CEQA. Based upon the results of the Initial Study, the City's Environmental Coordinator has determined that the project will not result in significant effects on the environment.

WHEREAS, a Mitigated Negative Declaration was prepared by the Resource Officer of the City of Oceanside for the General Plan Amendment pursuant to the California Environmental Quality Act of 1970 and the State Guidelines;

WHEREAS, the City Council does hereby find that the Initial Study/Mitigated Negative Declaration has been prepared in accordance with requirements of CEQA, the State CEQA

Guidelines, and the Ordinance 04-OR300-1 of the City of Oceanside adopting procedures and guidelines to implement CEQA, and hereby adopts the Mitigated Negative Declaration and the Mitigation, Monitoring and Reporting Program; and

WHEREAS, the Mitigated Negative Declaration and Mitigation and Monitoring and Reporting Program (MMRP) have been determined to be accurate and adequate documents, which reflect the independent judgment and analysis of the City Council. On the basis of the entire record before it, the City Council finds that there is no substantial evidence that the project, with implementation of the mitigation measures proposed, will have a significant impact on the environment.

WHEREAS, based on such evidence and testimony, including but not limited to the report of the Planning Department, the City Council finds as follows:

For the Amendment to the General Plan Land Use Element:

1. That a General Commercial (GC) Land Use designation is more compatible with the existing use and the surroundings than the existing Commercial Limited and Single Family Residential designation. The site has a tremendous opportunity to foster economic activity and will provide the neighborhood commercial uses that are encouraged for the area.
2. Future development and improvements of the site will be compatible in height and scale with surrounding land uses designated (LI) Limited industrial and (GC) General Commercial to the north, and east of the subject site.

WHEREAS, these changes were found to not have a significant impact on the environment pursuant to the provisions of the California Environmental Quality Act; and

NOW, THEREFORE, the City Council of the City of Oceanside does resolve as follows:

1. General Plan Amendment (GPA-4-07) is hereby approved.

///

///

2. Notice is hereby given that the time within which judicial review must be sought on this decision is governed by Govt. Code Section 65009 and CCP Section 1094.6.

PASSED AND ADOPTED by the City Council of the City of Oceanside, California, this _____ day of _____ 2008, by the following vote:

AYES:

NAYS:

ABSENT:

ABSTAIN:

_____
MAYOR OF THE CITY OF OCEANSIDE

ATTEST:

_____
CITY CLERK

APPROVED AS TO FORM:

_____
CITY ATTORNEY

ORDINANCE NO.

AN ORDINANCE OF THE CITY OF OCEANSIDE AMENDING THE ZONING DISTRICT MAP FROM SINGLE FAMILY RESIDENTIAL (RS) AND COMMERCIAL LIMITED (CL) TO COMMERCIAL GENERAL (CG) FOR PROPERTY LOCATED AT THE SOUTH EAST CORNER OF MISSION AVENUE AND CAROLYN CIRCLE

(Mohsen and Susana Arabshahi –Applicant)

WHEREAS, an application for Zone Amendment (ZA-3-03) has been filed which would amend the zoning from Single Family Residential (RS) and Commercial Limited (CL) to Commercial General (CG) zoning designation for property located at the south east corner of Mission Avenue and Carolyn Circle at 3213 Mission Avenue more particularly described in Exhibit "A" attached hereto and incorporated herein by reference thereto;

WHEREAS, the Planning Commission of the City of Oceanside did, on December 17, 2007, conduct a duly advertised public hearing as required by law and did, by the adoption of Planning Commission Resolution No. 2007-P68, recommend approval of said Zone Amendment (ZA-3-03);

WHEREAS, said Planning Commission recommendation was made in conjunction with an approval of a Development Plan (D-11-03), Conditional Use Permits (C-29-06, C-18-07, C-19-07) and Variances (V-2-07, V-5-07, V-6-07);

WHEREAS, the City Council of the City of Oceanside did hold a duly advertised public hearing on February 13, 2008, to consider said Zone Amendment (ZA-3-03) application and the recommendation of the Planning Commission thereon and did hear all persons supporting or opposing the proposed Zone Amendment (ZA-3-03);

WHEREAS, based upon such evidence, testimony and staff reports, this Council finds as follows:

///

1. The granting of the zone amendment is consistent with the purposes of the Zoning Ordinance.

2. The zone amendment, which is attached as Exhibit "B", is consistent with the Land Use Element of the General Plan and other applicable policies and is compatible with the surrounding land uses.

3. The design aspects of the zone amendment will enhance the potential for high quality urban commercial development in comparison with development that might otherwise occur if the Commercial General designation were not approved.

4. The zone amendment includes adequate provisions for utilities, needed neighborhood commercial services, and vehicle access; and public service demands will not exceed the capacity of existing and planned systems.

5. The Development Plan (D-11-03) and Conditional Use Permits (C-29-06, C-18-07, C-19-07) will be implemented by the approved zone amendment, which are on file in the Planning Department.

6. The notice and hearing provisions for the Zone Amendment contained in the City's Zoning Ordinance have been complied with.

WHEREAS, a Negative Declaration was prepared by the Resource Officer of the City of Oceanside covering this Zone Amendment and the associated development project pursuant to the California Environmental Quality Act of 1970 and the State Guidelines thereto as amended to date and has been certified by the Planning Commission in conjunction with its recommendation on the application;

WHEREAS, the City Council does hereby find that the Initial Study/Mitigated Negative Declaration has been prepared in accordance with requirements of CEQA, the State CEQA Guidelines, and the Ordinance 04-OR300-1 of the City of Oceanside adopting procedures and guidelines to implement CEQA, and hereby adopts the Mitigated Negative Declaration and the Mitigation, Monitoring and Reporting Program; and

WHEREAS, the Mitigated Negative Declaration and Mitigation and Monitoring and Reporting Program (MMRP) have been determined to be accurate and adequate documents, which reflect the independent judgment and analysis of the City Council. On the basis of the entire record before it, the City Council finds that there is no substantial evidence that the project, with implementation of the mitigation measures proposed, will have a significant impact on the environment.

NOW, THEREFORE, the City Council of the City of Oceanside DOES ORDAIN as follows:

1. The Zone Amendment (ZA-3-03) application for certain real property described in Exhibit "A" and Plan Exhibit "B" attached hereto is herby approved, and the Planning Director is directed to amend the appropriate Zoning Map to show the Zone Amendment.

2. This ordinance shall not be codified.

3. The City Clerk of the City of Oceanside is hereby directed to publish this ordinance once within fifteen (15) days after its passage in the North County Times, a newspaper of general circulation published in the City of Oceanside.

///

///

4. This ordinance shall take effect and be in force on the thirtieth (30th) day from and after its final passage.

INTRODUCED at a regular meeting of the City Council of the City of Oceanside, California held on the _____ day of _____, 2008, and, thereafter,

PASSED AND ADOPTED by the City Council of the City of Oceanside, California, this ___day of _____, 2008 by the following vote:

AYES:

NAYS:

ABSENT:

ABSTAIN:

_____
Mayor of the City of Oceanside

ATTEST:

_____
City Clerk

APPROVED AS TO FORM:

_____
City Attorney

EXHIBIT A

RECEIVED
JUN 18 2003
Planning Department

LEGAL DESCRIPTION

PARCEL 1:

ALL OF LOT 20 OF SAN LUIS REY ESTATES UNIT NO. 1, IN THE CITY OF OCEANSIDE, COUNTY OF SAN DIEGO, STATE OF CALIFORNIA, ACCORDING TO MAP THEREOF NO. 3907, FILED IN THE OFFICE OF THE COUNTY RECORDER OF SAN DIEGO COUNTY, JUNE 11, 1958.

PARCEL 2:

THAT CERTAIN PORTION OF THE SOUTHWEST QUARTER OF SECTION 18, TOWNSHIP 11 SOUTH, RANGE 4 WEST, SAN BERNARDINO MERIDIAN, IN THE CITY OF OCEANSIDE, COUNTY OF SAN DIEGO, STATE OF CALIFORNIA, ACCORDING TO UNITED STATES GOVERNMENT SURVEY APPROVED, DECEMBER 27, 1870, DESCRIBED AS FOLLOWS:

BEGINNING AT THE MOST NORTHERLY CORNER OF LOT 20 OF SAN LUIS REY ESTATES UNIT NO. 1, IN THE COUNTY OF SAN DIEGO, STATE OF CALIFORNIA ACCORDING TO MAP THEREOF NO. 3907, FILED IN THE OFFICE OF THE COUNTY RECORDER OF SAN DIEGO COUNTY, JUNE 11, 1958; THENCE ALONG THE SOUTHEASTERLY LINE OF SAN LUIS REY ROAD (MISSION AVENUE) 100 FEET WIDE, AS SHOWN ON SAID MAP NO. 3907, NORTH 50° 23' 30" EAST 125 FEET; THENCE LEAVING SAID SOUTHEASTERLY LINE AT RIGHT ANGLES THERETO, SOUTH 39° 36' 30" EAST 125 FEET; THENCE PARALLEL WITH SAID SOUTHEASTERLY LINE OF SAN LUIS REY ROAD, SOUTH 50° 23' 30" WEST 125 FEET TO A POINT IN THE NORTHEASTERLY LINE OF LOT 18 OF SAID SAN LUIS REY ESTATES UNIT NO. 1; THENCE ALONG THE NORTHEASTERLY LINE OF LOTS 18, 19 AND 20 OF SAID SAN LUIS REY ESTATES UNIT NO. 1, NORTH 39° 36' 30" WEST 125 FEET TO THE POINT OF BEGINNING.

Mohsen General Plan Amendment and Zone Change

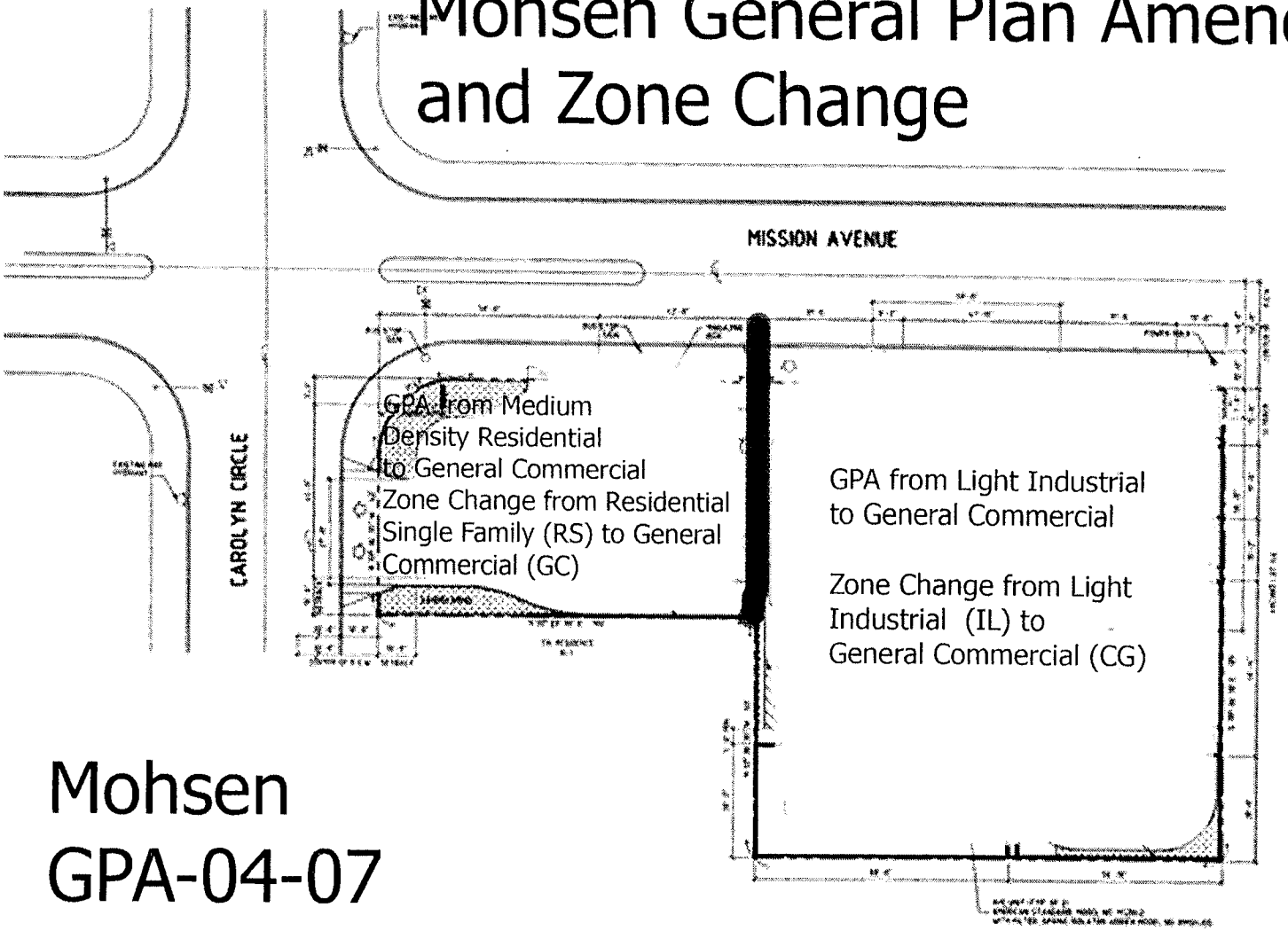

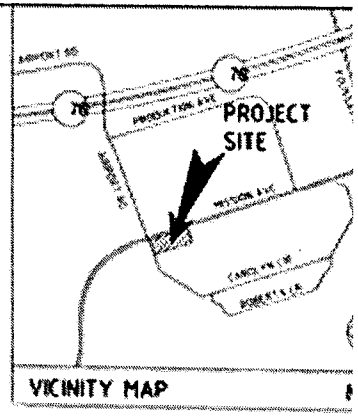

Mohsen
GPA-04-07
ZA-03-07

EXHIBIT B

RECEIVED
NOV 1 4 2007
Planning Department

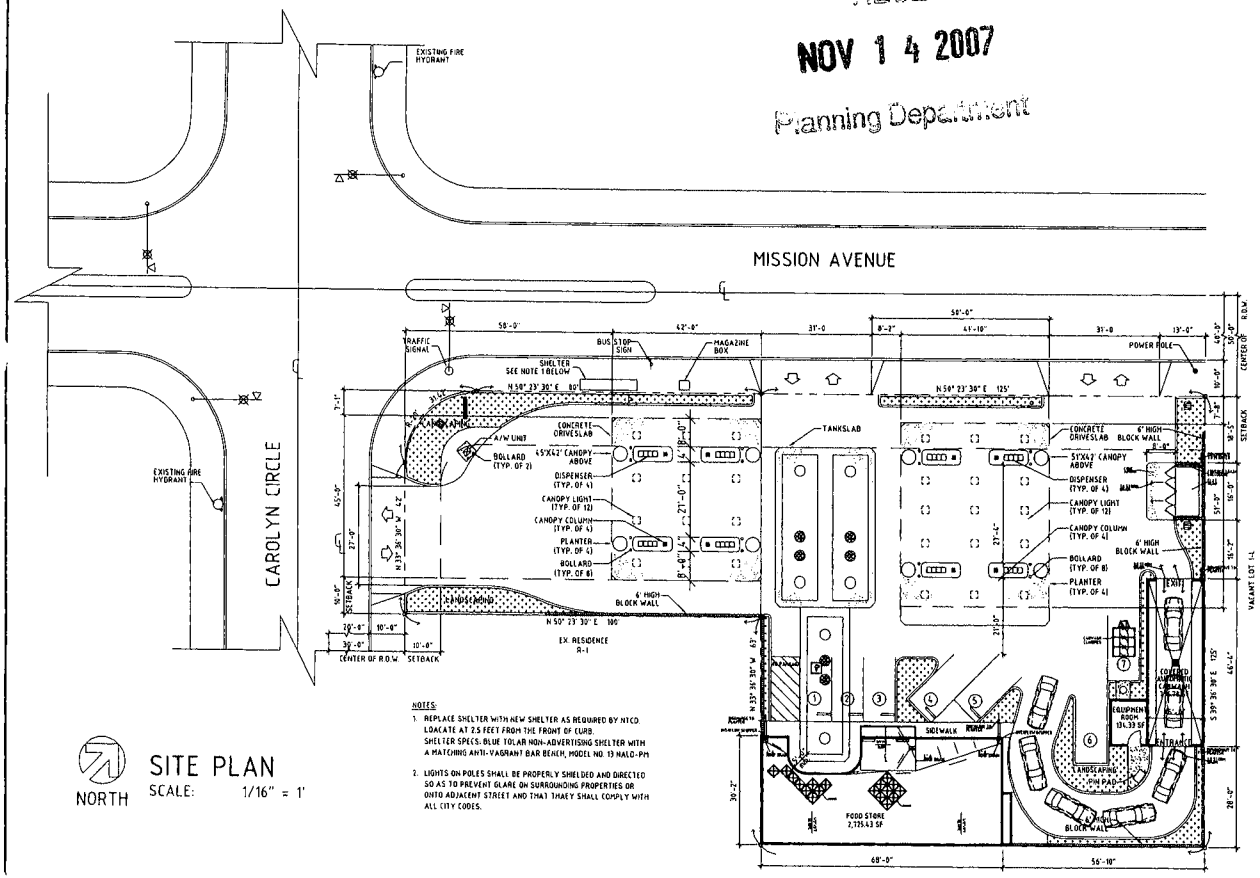

NORTH

SITE PLAN

SCALE: 1/16" = 1'

NOTES:

1. REPLACE SHELTER WITH NEW SHELTER AS REQUIRED BY NTCD. LOACATE AT 2.5 FEET FROM THE FRONT OF CURB. SHELTER SPECS: BLUE TOLAR NON-ADVERTISING SHELTER WITH A MATCHING ANTI-VAGRANT BAR BENEH, MODEL NO. 13 NALO-PM
2. LIGHTS ON POLES SHALL BE PROPERLY SHIELDED AND DIRECTED SO AS TO PREVENT GLARE ON SURROUNDING PROPERTIES OR ONTO ADJACENT STREET AND THAT THEY SHALL COMPLY WITH ALL CITY CODES.

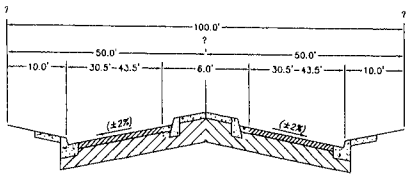

MISSION AVENUE
NOT TO SCALE

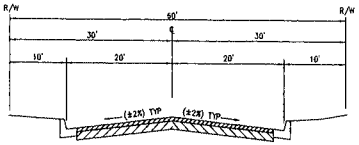

CAROLYN CIRCLE
NOT TO SCALE

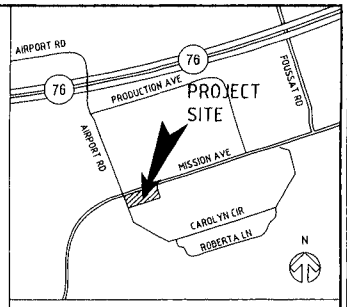

VICINITY MAP NTS

OWNER:
MOHSEN
3213 MISSION AVE.
OCEANSIDE CA, 92054
PH: 760.945.7222
FAX: 760.945.7270

APPLICANT:
ANDREW PASZTERKO
2055 N. ALVARADO ST.,
LOS ANGELES, CA. 90039
ph: 323.665.0844
fax: 323.661.0723

ARCHITECT:
GASOLINE RETAIL FACILITIES CONSULTING
2055 N. ALVARADO ST.,
LOS ANGELES, CA. 90039
ATTN: ANDREW PASZTERKO
CA. LIC.#: C-12253
ph: 323.665.0844
fax: 323.661.0723

CIVIL ENGINEER:
STEVE BARGER
620 MISSION AVE. OCEANSIDE, CA. 92054
PH: 661.325.9474 EXT. 111

PROJECT DATA:

PROJECT ADDRESS: 3213 MISSION AVE. OCEANSIDE, CA 92054

THOMAS BROTHERS MAP COORDINATES:
PAGE 1086 GRID E5 SAN DIEGO COUNTY

ACCESSOR'S PARCEL NUMBER
160-270-11

EXISTING GENERAL PLAN: RESIDENTIAL AND COMMERCIAL

PROPOSED GENERAL PLAN: GENERAL COMMERCIAL

EXISTING ZONING: COMMERCIAL LIMITED (CL)

PROPOSED ZONING: GENERAL COMMERCIAL (CG)

LOT SIZE: 21,739.16 SQ.FT.

PERCENT OF LANDSCAPED AREA REQUIRED: 10.0% OF LOT AREA

PERCENT OF LANDSCAPED AREA PROVIDED: 2,200 SQ.FT. 10.12% OF LOT AREA

PROPOSED BUILDING COVERAGE: 36.10%

PERCENT OF PROJECT IN PAVEMENT 27.96%

NUMBER OF STORIES:
TWO

PRESENT USE:
GAS STATION WITH FOOD STORE

PROPOSED USE:
GAS STATION WITH FOOD STORE AND CAR-WASH

TYPE OF CONSTRUCTION:
(E) CANOPY: II-N
(E) RETAIL: V
NEW CAR-WASH: II-N

OCCUPANCY CLASS:
(E) CANOPY:
(E) RETAIL:
NEW CAR-WASH:

FIRE SPRINKLERS:
NONE

EXISTING GROSS FLOOR AREA TO BE DEMOLISHED:
NONE

BUILDING CODE:
CBC 2002

BUILDING:	AREA:	PARKING RATIO:	PARKING REQUIRED:
(E) CANOPY:	2,342.67 SQ.FT.	1/2,500	1
(N) CANOPY:	1,889.62 SQ.FT.	1/2,500	1
(N) FOOD STORE:			
GR. FLOOR:	1,893.83 SQ.FT.	1/200	9
2ND. FLOOR:	831.60 SQ.FT.	1/200	4
NEW CAR-WASH	891.11 SQ.FT.	-	-
TOTAL:	7,848.83 SQ.FT.		15

PARKING PROVIDED: 7

LEGEND:
(E) = EXISTING
(N) = NEW

DIG ALERT
DIAL TOLL FREE 1-800-422-4133 AT LEAST TWO DAYS BEFORE YOU DIG UNDERGROUND SERVICE ALERT OF SOUTHERN CALIFORNIA

DOCUMENT PREPARED BY:
GASOLINE RETAIL FACILITIES CONSULTING
ATTN: ANDREW PASZTERKO - ARCHITECT
CALIFORNIA LIC. # C-12253
2055 NORTH ALVARADO STREET,
LOS ANGELES, CALIFORNIA 90039
ph: 323.665.0844; fax: 323.661.0723
andy@gasretail.com

NO	DATE	REVISIONS	PROJECT RELEASE
			ISSUED FOR PLAN CHECK
			BID RELEASE
			CONST. RELEASE
			AS BUILT

ADDRESS: 3213 MISSION AVE. OCEANSIDE, CA

PROJECT TITLE: NEW GASOLINE RETAIL FACILITY WITH FOOD MARKET AND CAR WASH

Gasoline Retail Facilities Consulting

SHEET CONTENTS: SITE PLAN

Date 02.19.07
Scale AS SHOWN
Drawn /CAD
Job No. GRFC 3611
Sheet AS-1
of sheets

ATTACHMENT 3

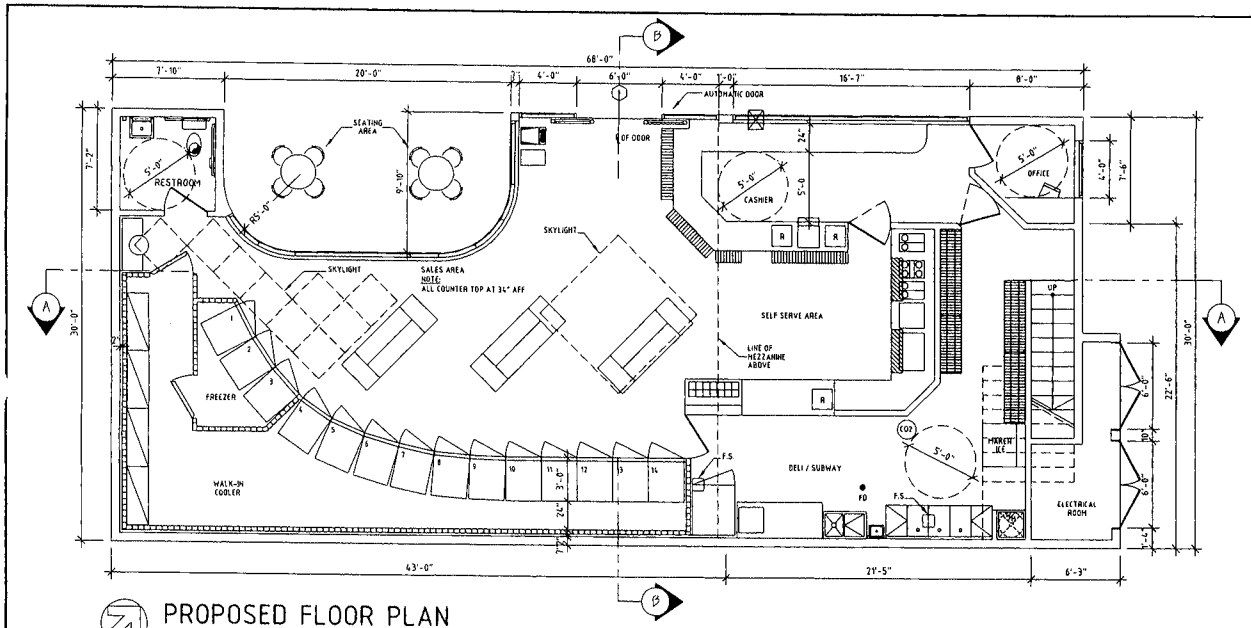

PROPOSED FLOOR PLAN

SCALE: 1/4" = 1'

NORTH

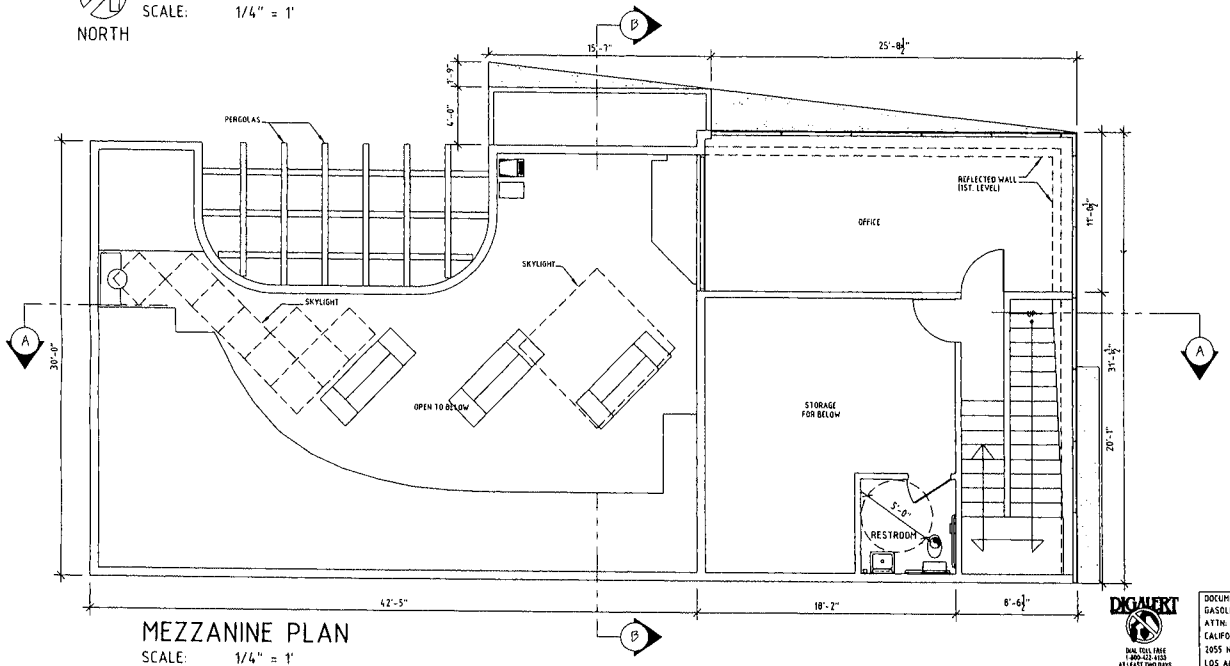

MEZZANINE PLAN

SCALE: 1/4" = 1'

DIGALERT

DIAL TOLL FREE
1-800-422-4133
AT LEAST TWO DAYS
BEFORE YOU DIG
UNDERGROUND SERVICE ALERT
OF SOUTHERN CALIFORNIA

DOCUMENT PREPARED BY:
GASOLINE RETAIL FACILITIES CONSULTING
ATTN: ANDREW PASZTERKO - ARCHITECT
CALIFORNIA LIC. # C-32253
2055 NORTH ALVARADO STREET,
LOS ANGELES, CALIFORNIA 90039
ph: 323.665.0844; fax: 323.661.0723
andy@gasretail.com

NO	DATE	REVISIONS

PROJECT RELEASE
- ISSUED FOR PLAN CHECK
- BID RELEASE
- CONST RELEASE
- AS BUILT

ADDRESS:
3213 MISSION AVE.
OCEANSIDE, CA

PROJECT TITLE:
NEW GASOLINE RETAIL FACILITY WITH FOOD MARKET AND CAR WASH

Gasoline Retail Facilities Consulting

SHEET CONTENTS:
FLOOR PLAN
MEZZANINE PLAN

Date	06.27.06
Scale	AS SHOWN
Drawn	/CAD
Job No.	GRFC 3611
Sheet	A-1
of	sheets

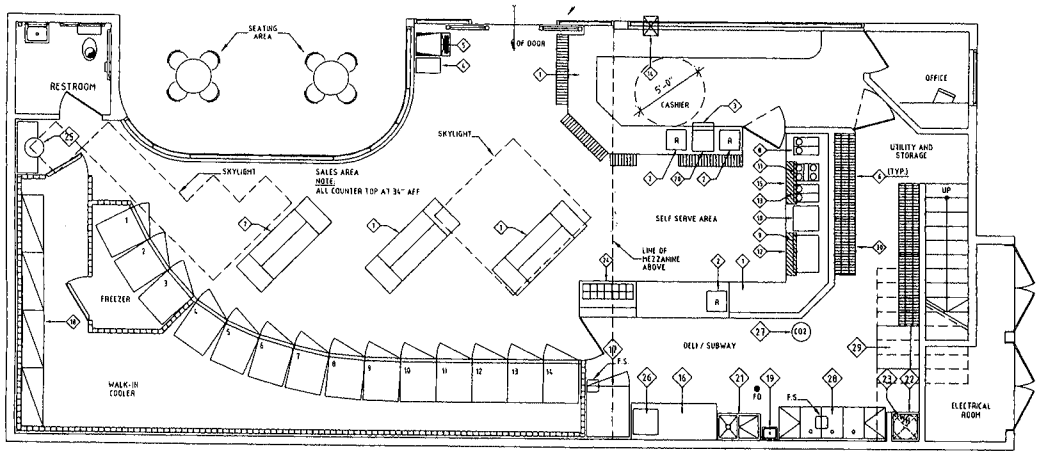

FIXTURE PLAN

SCALE: 1/4" = 1'

FIXTURE SCHEDULE / KEYNOTE REFERENCE			Must verify w/ owner prior to rough-in installation of all equip. will be coordinated by G.C.						
NO.	DESCRIPTION	WATER & DRAIN	ELECTRICAL SPECIFICATIONS						
			MAKE:	MODEL:	VOLTAGE	AMP	PHASE	BRA	REMARKS:
1	Counter (max height 34")								
2	Cash Register								
3	Undercounter Safe								
4	Vendor Rack								
5	ATM								
6	Shelving								
7	Gondola								
8	Bowl Bubbler								
9	Ice								
10	Fountain	o							
11	Air Pots								
12	Cold Cups Under Counter								
13	Brewer	o							
14	Pass Thru Window								
15	Hot Cups Under Counter								
16	Steel Prep Table								
17	Bread Sizer	o							
18	Shelving in Walk-in-Cooler								
19	Hand Sink W/ Paper Towel	o							
20	Display								
21	Vegetable Sink	o							
22	Mop Sink	o							
23	Water Heater	o							
24	Prep Table								
25	Lotto								
26	Oven								
27	CO2								
28	Dish Sink	o							
29	Ice Maker								
30	Bag & Box								

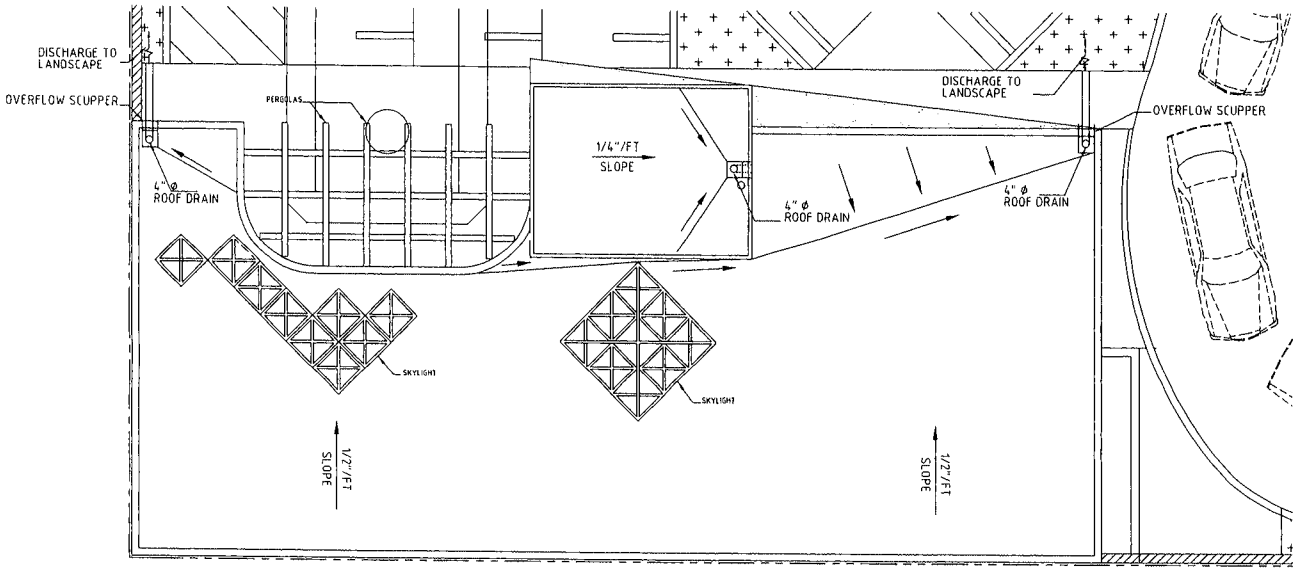

NORTH

ROOF PLAN

SCALE: 1/4" = 1'

DIGALERT
DIAL TOLL FREE 1-800-422-4133 AT LEAST TWO DAYS BEFORE YOU DIG UNDERGROUND SERVICE ALERT OF SOUTHERN CALIFORNIA

DOCUMENT PREPARED BY:
GASOLINE RETAIL FACILITIES CONSULTING
ATTN: ANDREW PASZTERKO - ARCHITECT
CALIFORNIA LIC. # C-12253
2055 NORTH ALVARADO STREET,
LOS ANGELES, CALIFORNIA 90039
ph: 323.665.0844; fax: 323.661.0723
andy@gazretail.com

NO	DATE	REVISIONS

PROJECT RELEASE
ISSUED FOR PLAN CHECK
BID RELEASE
CONS'T RELEASE
AS BUILT

ADDRESS:
3213 MISSION AVE.
OCEANSIDE, CA

PROJECT TITLE:
NEW GASOLINE RETAIL FACILITY WITH FOOD MARKET AND CAR WASH

Gasoline Retail Facilities Consulting

SHEET CONTENTS:
-FIXTURE PLAN
-ROOF PLAN

Date 06.27.06
Scale AS SHOWN
Drawn /CAD
Job No. GRFC 3611
Sheet A-2
of sheets

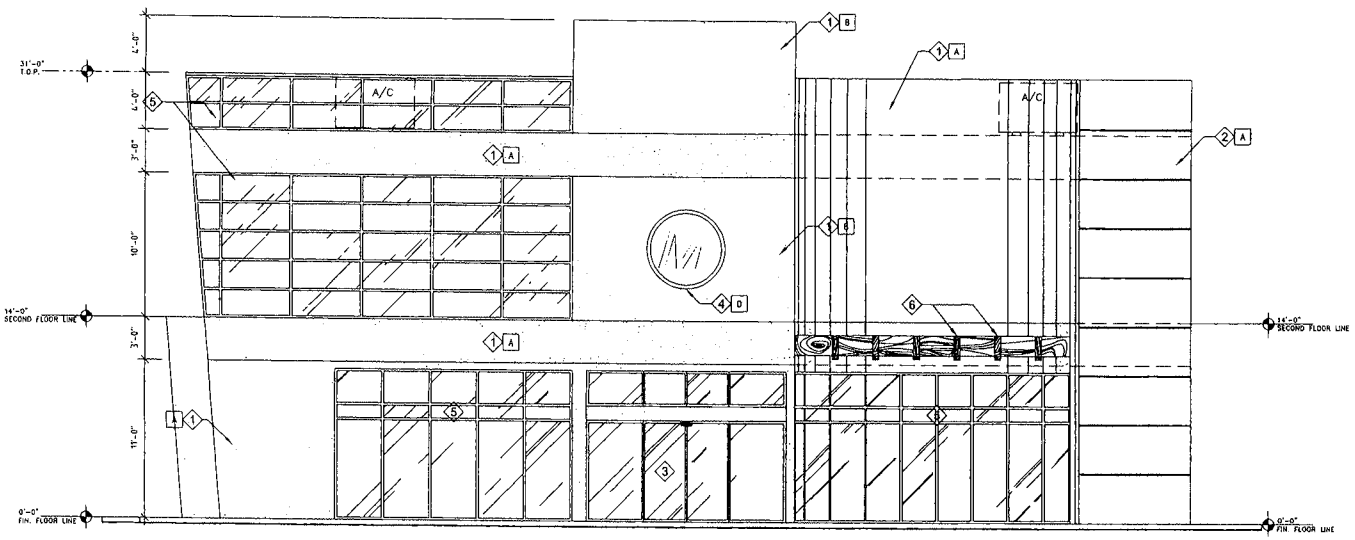

PROPOSED NORTH ELEVATION

SCALE: 1/4" = 1'

NOTE:
SOUTH SIDE OF BUILDING
SHALL BE BLANK STUCCO WALL
PAINTED W/ PRIMARY BUILDING COLOR

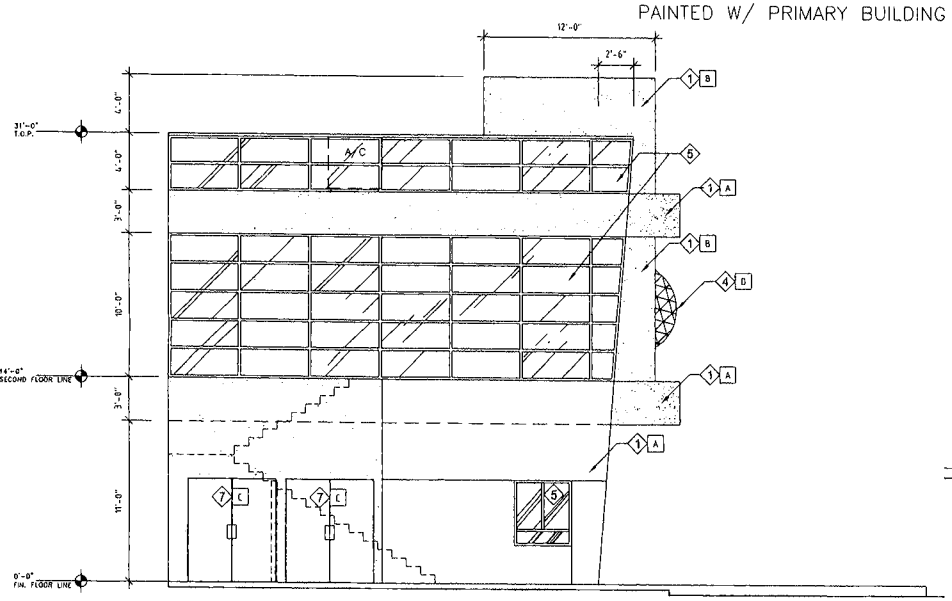

PROPOSED EAST ELEVATION

SCALE: 1/4" = 1'

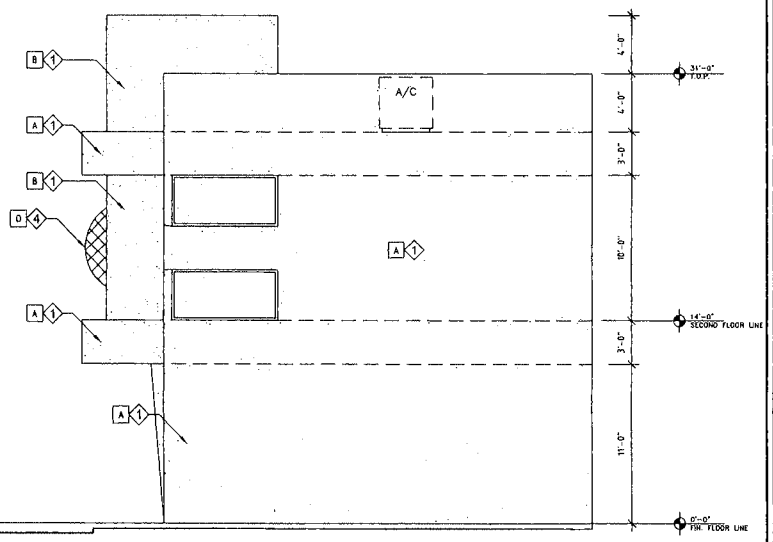

PROPOSED WEST ELEVATION

SCALE: 1/4" = 1'

MATERIALS LEGEND

1	EXTERIOR PLASTER
2	PLASTER/METAL CONTROL JOINT
3	AUTOMATIC DOOR SYSTEM
4	EXTERIOR LETTER SIGN (SEPERATE PERMIT REQUIRED)
5	TEMPERED CLEAR GLASS W/ALUMINUM FRAME
6	PERGOLAS (WOOD)
7	STEEL DOOR

COLORS LEGEND

A	"LA HABRA" X-55 FRENCH VANILLA
B	"LA HABRA" X-580 SIERRA TAN
C	PAIN TO MATCH WALL "LA HABRA" X-55 FRENCH VANILLA
D	GREEN

DIGALERT
DIAL TOLL-FREE 1-800-422-4133 AT LEAST TWO DAYS BEFORE YOU DIG UNDERGROUND SERVICE ALERT OF SOUTHERN CALIFORNIA

DOCUMENT PREPARED BY:
GASOLINE RETAIL FACILITIES CONSULTING
ATTN. ANDREW PASZTERKO - ARCHITECT
CALIFORNIA LIC. # C-12253
2055 NORTH ALVARADO STREET,
LOS ANGELES, CALIFORNIA 90039
ph: 323.665.0844; fax: 323.661.0723
andy@gazretail.com

NO	DATE	REVISIONS	PROJECT RELEASE
			ISSUED FOR PLAN CHECK
			BID RELEASE
			CONST. RELEASE
			AS BUILT

ADDRESS: 3213 MISSION AVE. OCEANSIDE, CA

PROJECT TITLE: NEW GASOLINE RETAIL FACILITY WITH FOOD MARKET AND CAR WASH

Gasoline Retail Facilities Consulting

SHEET CONTENTS: ELEVATIONS

Date	06.15.06
Scale	AS SHOWN
Drawn	/CAD
Job No.	GRFC 3611
Sheet	A-3
of	sheets

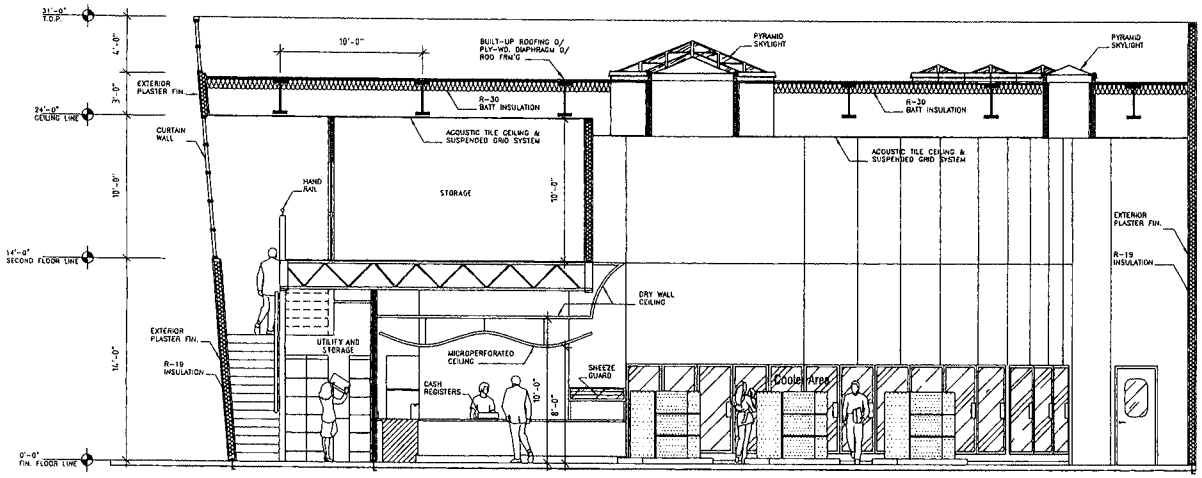

SECTION "A"

SCALE: 1/4" = 1'

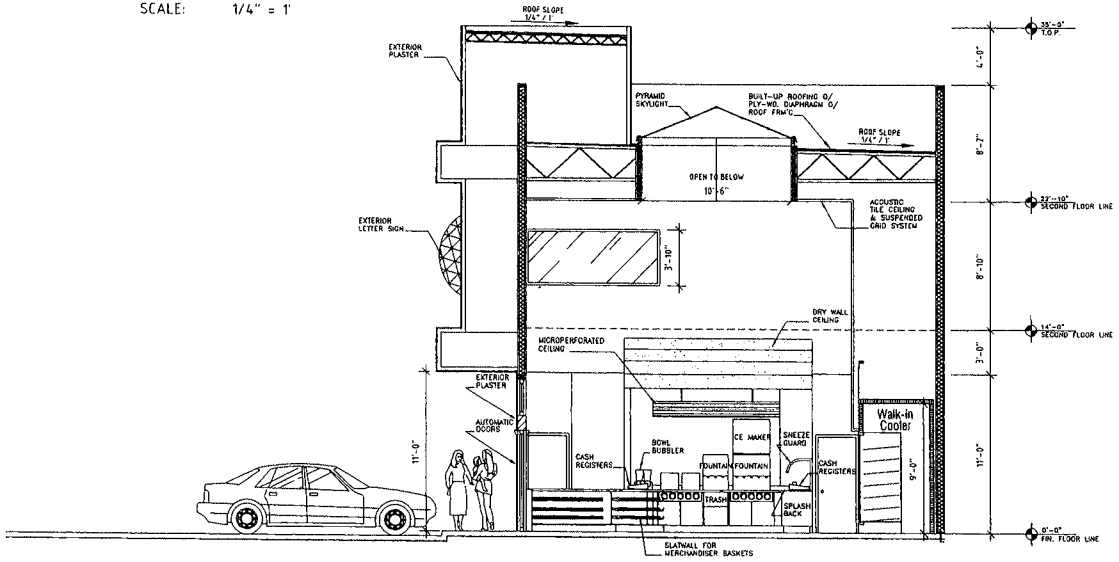

SECTION "B"

SCALE: 1/4" = 1'

DIGALERT

CALL TOLL FREE (800) 227-2600 AT LEAST TWO DAYS BEFORE YOU DIG UNDERGROUND SERVICE ALERT OF SOUTHERN CALIFORNIA

DOCUMENT PREPARED BY:
GASOLINE RETAIL FACILITIES CONSULTING
ATTN: ANDREW PASZTERKO - ARCHITECT
CALIFORNIA LIC. # C-12253
2055 NORTH ALVARADO STREET,
LOS ANGELES, CALIFORNIA 90039
ph: 323.665.0844; fax: 323.6610723
andy@gasretail.com

NO	DATE	REVISIONS	PROJECT RELEASE
			ISSUED FOR PLAN CHECK
			BID RELEASE
			CONST. RELEASE
			AS BUILT

ADDRESS: 3213 MISSION AVE. OCEANSIDE, CA

PROJECT TITLE: NEW GASOLINE RETAIL FACILITY WITH FOOD MARKET AND CAR WASH

Gasoline Retail Facilities Consulting

SHEET CONTENTS: SECTIONS

Date	05.17.06
Scale	AS SHOWN
Drawn	/CAD
Job No.	GRFC 3611
Sheet	A-3.1
of	sheets

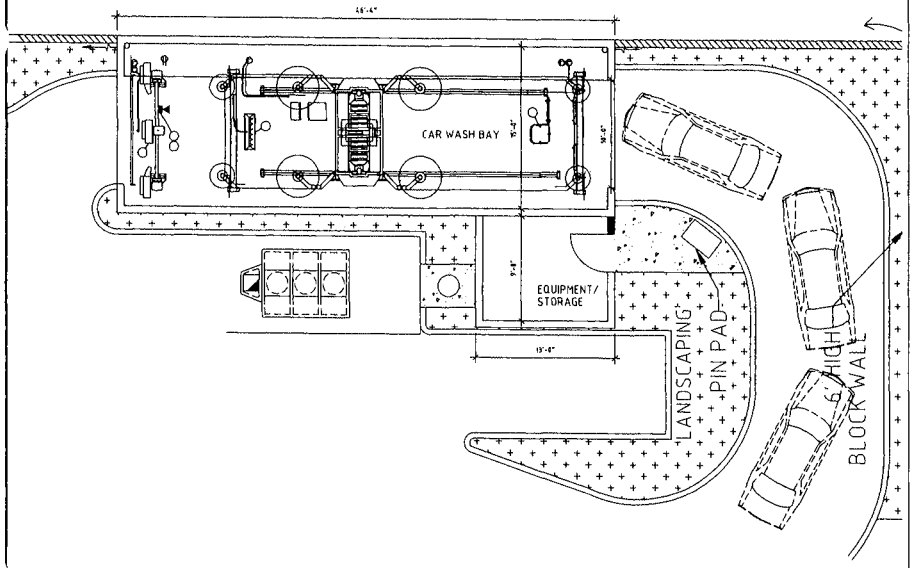

FLOOR PLAN
SCALE: 3/16" = 1'
NORTH

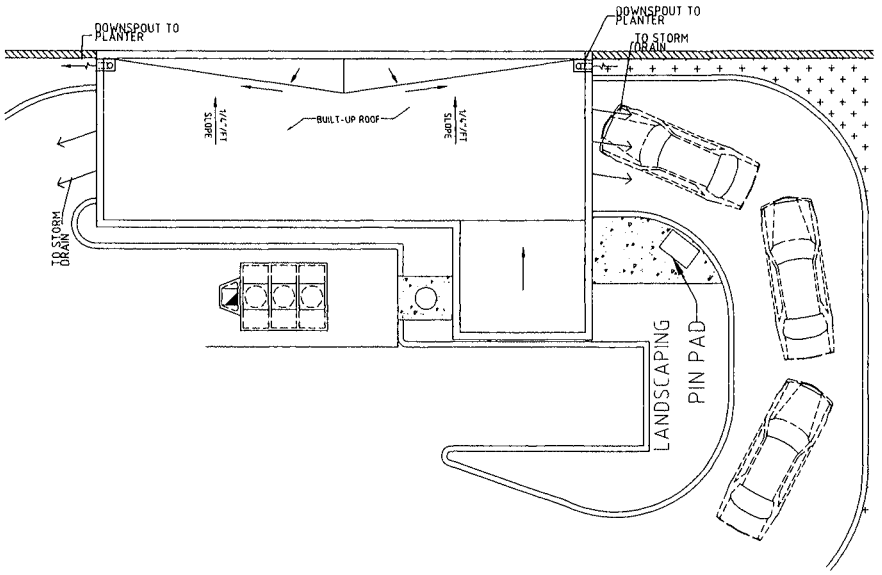

ROOF PLAN
SCALE: 3/16" = 1'

DIG ALERT
DIAL TOLL FREE
1-800-422-4133
AT LEAST TWO DAYS
BEFORE YOU DIG
UNDERGROUND SERVICE ALERT
OF SOUTHERN CALIFORNIA

DOCUMENT PREPARED BY:
GASOLINE RETAIL FACILITIES CONSULTING
ATTN: ANDREW PASZTERKO - ARCHITECT
CALIFORNIA LIC. # C-12253
2055 NORTH ALVARADO STREET,
LOS ANGELES, CALIFORNIA 90039
ph: 323.665.0844; fax: 323.661.0723
andy@gazretail.com

NO	DATE	REVISIONS

PROJECT RELEASE
ISSUED FOR PLAN CHECK
BID RELEASE
CONST. RELEASE
AS BUILT

ADDRESS:
3213 MISSION AVE.
OCEANSIDE, CA

PROJECT TITLE:
NEW GASOLINE RETAIL FACILITY WITH
FOOD MARKET AND CAR WASH

Gasoline
Retail
Facilities
Consulting

SHEET CONTENTS
CAR-WASH
-FLOOR PLAN
-ROOF PLAN

Date 06.15.06
Scale AS SHOWN
Drawn /CAD
Job No. GRFC 3611
Sheet A-4
of sheets

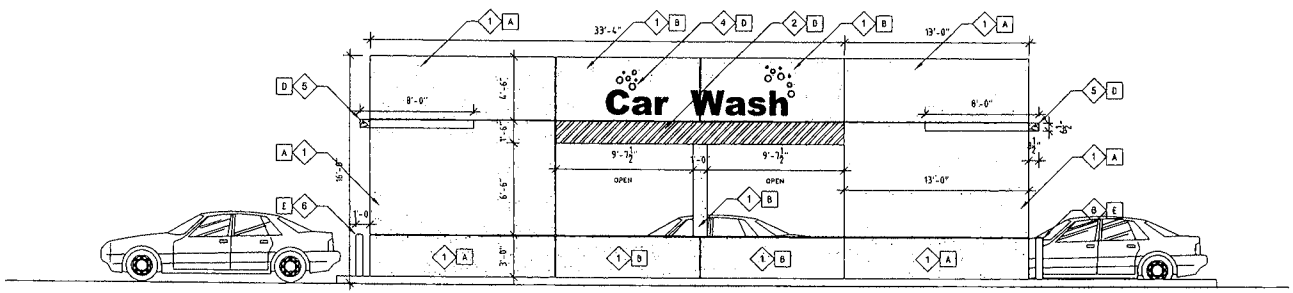

SIDE ELEVATION
SCALE: 1/4" = 1'

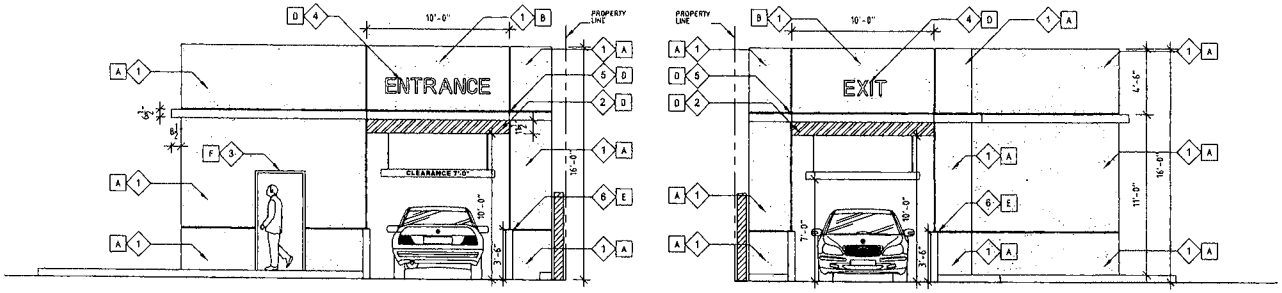

FRONT ELEVATION
SCALE: 1/4" = 1'

REAR ELEVATION
SCALE: 1/4" = 1'

MATERIALS LEGEND	
1	EXTERIOR STUCCO/METAL CONTROL JOINT
2	ACM METAL PANEL
3	STEEL DOOR
4	INTERNALLY ILLUMINATED CHANNEL LETTERS
5	LIGHTING WIDE FASCIA
6	ø6" BOLLARDS

COLORS LEGEND	
A	"LA HABRA" X-580 SIERRA TAN
B	"LA HABRA" X-55 FRENCH VANILLA
C	PAIN TO MATCH WALL "LA HABRA" X-55 FRENCH VANILLA
D	GREEN
E	WHITE
F	PAIT TO MATCH THE WALL "LA HABRA" X-55 FRENCH VANILLA

DIGALERT
DIAL TOLL FREE 1-800-422-4133 AT LEAST TWO DAYS BEFORE YOU DIG UNDERGROUND SERVICE ALERT OF SOUTHERN CALIFORNIA

DOCUMENT PREPARED BY:
GASOLINE RETAIL FACILITIES CONSULTING
ATTN: ANDREW PASZTERKO - ARCHITECT
CALIFORNIA LIC. # C-12253
2055 NORTH ALVARADO STREET,
LOS ANGELES, CALIFORNIA 90039
ph: 323.665.0844, fax: 323.661.0723
andy@gasretail.com

NO	DATE	REVISIONS	PROJECT RELEASE
			ISSUED FOR PLAN CHECK
			BID RELEASE
			CONST RELEASE
			AS BUILT

ADDRESS:
3213 MISSION AVE.
OCEANSIDE, CA

PROJECT TITLE:
NEW GASOLINE RETAIL FACILITY WITH FOOD MARKET AND CAR WASH

Gasoline Retail Facilities Consulting

SHEET CONTENTS:
CAR-WASH ELEVATIONS

Date	06.15.06
Scale	AS SHOWN
Drawn	/CAD
Job No.	GRFC 3611
Sheet	A-4.1
of	sheets

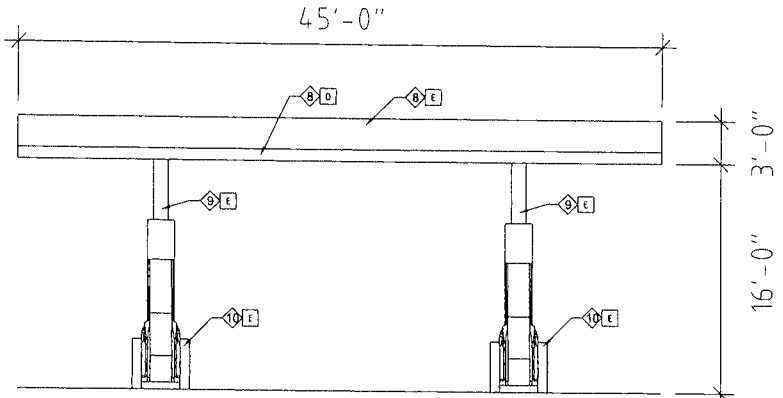

CANOPY 1 WEST ELEVATION
SCALE: 1/4" = 1'

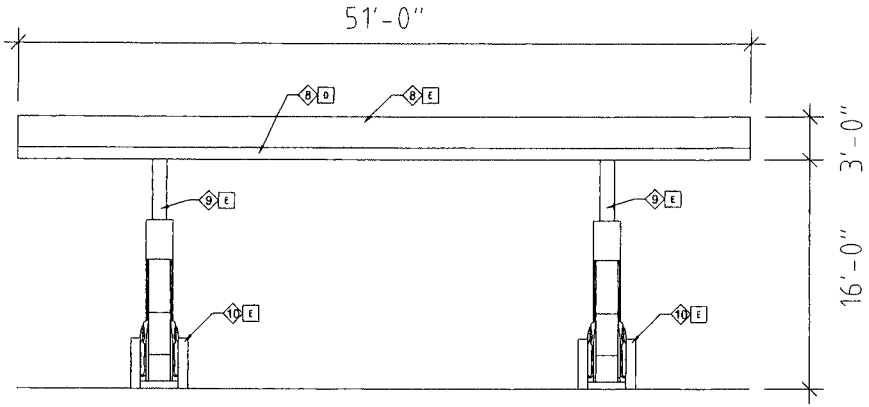

CANOPY 2 WEST ELEVATION
SCALE: 1/4" = 1'

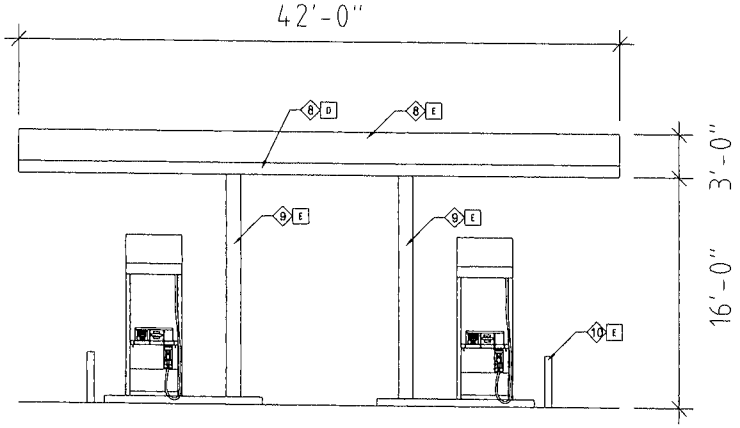

CANOPY 1 NORTH ELEVATION
SCALE: 1/4" = 1'

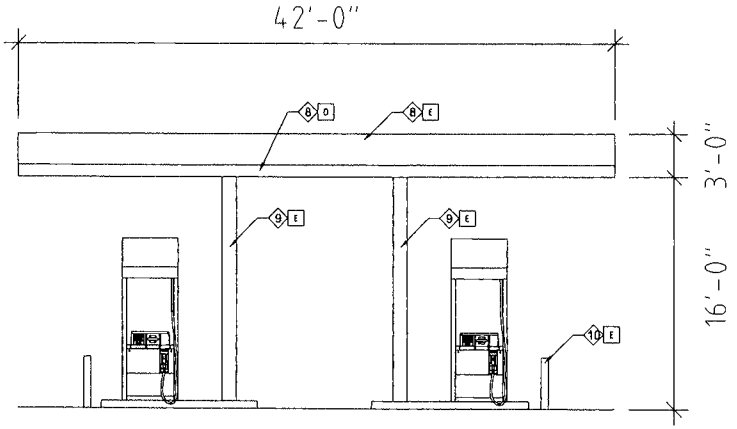

CANOPY 2 NORTH ELEVATION
SCALE: 1/4" = 1'

MATERIALS LEGEND	
1	EXTERIOR PLASTER
2	PLASTER/METAL CONTROL JOINT
3	AUTOMATIC DOOR SYSTEM
4	EXTERIOR LETTER SIGN (SEPERATE PERMIT REQUIRED)
5	TEMPERED CLEAR GLASS W/ALUMINUM FRAME
6	PERGOLAS (WOOD)
7	STEEL DOOR
8	ACM FACIA
9	STEEL COLUMN

COLORS LEGEND	
A	"LA HABRA" X-55 FRENCH VANILLA
B	"LA HABRA" X-580 SIERRA TAN
C	PAIN TO MATCH WALL "LA HABRA" X-55 FRENCH VANILLA
D	GREEN
E	WHITE

DIGALERT
DIAL TOLL FREE 1-800-422-4133 AT LEAST TWO DAYS BEFORE YOU DIG UNDERGROUND SERVICE ALERT OF SOUTHERN CALIFORNIA

DOCUMENT PREPARED BY:
GASOLINE RETAIL FACILITIES CONSULTING
ATTN: ANDREW PASZTERKO - ARCHITECT
CALIFORNIA LIC. # C-17253
2055 NORTH ALVARADO STREET,
LOS ANGELES, CALIFORNIA 90039
ph: 323.665.0844; Fax: 323.661.0723
andy@gazretail.com

NO	DATE	REVISIONS

PROJECT RELEASE
ISSUED FOR PLAN CHECK
BID RELEASE
CONST. RELEASE
AS BUILT

ADDRESS: 3213 MISSION AVE. OCEANSIDE, CA

PROJECT TITLE: NEW GASOLINE RETAIL FACILITY WITH FOOD MARKET AND CAR WASH

Gasoline Retail Facilities Consulting

SHEET CONTENTS: CANOPY ELEVATIONS

Date 02.19.07
Scale AS SHOWN
Drawn /CAD
Job No. GRFC 3611
Sheet A-5
of sheets

LANDSCAPE CONCEPT PLAN
MOHSEN GAS STATION EXPANSION
OCEANSIDE, CA

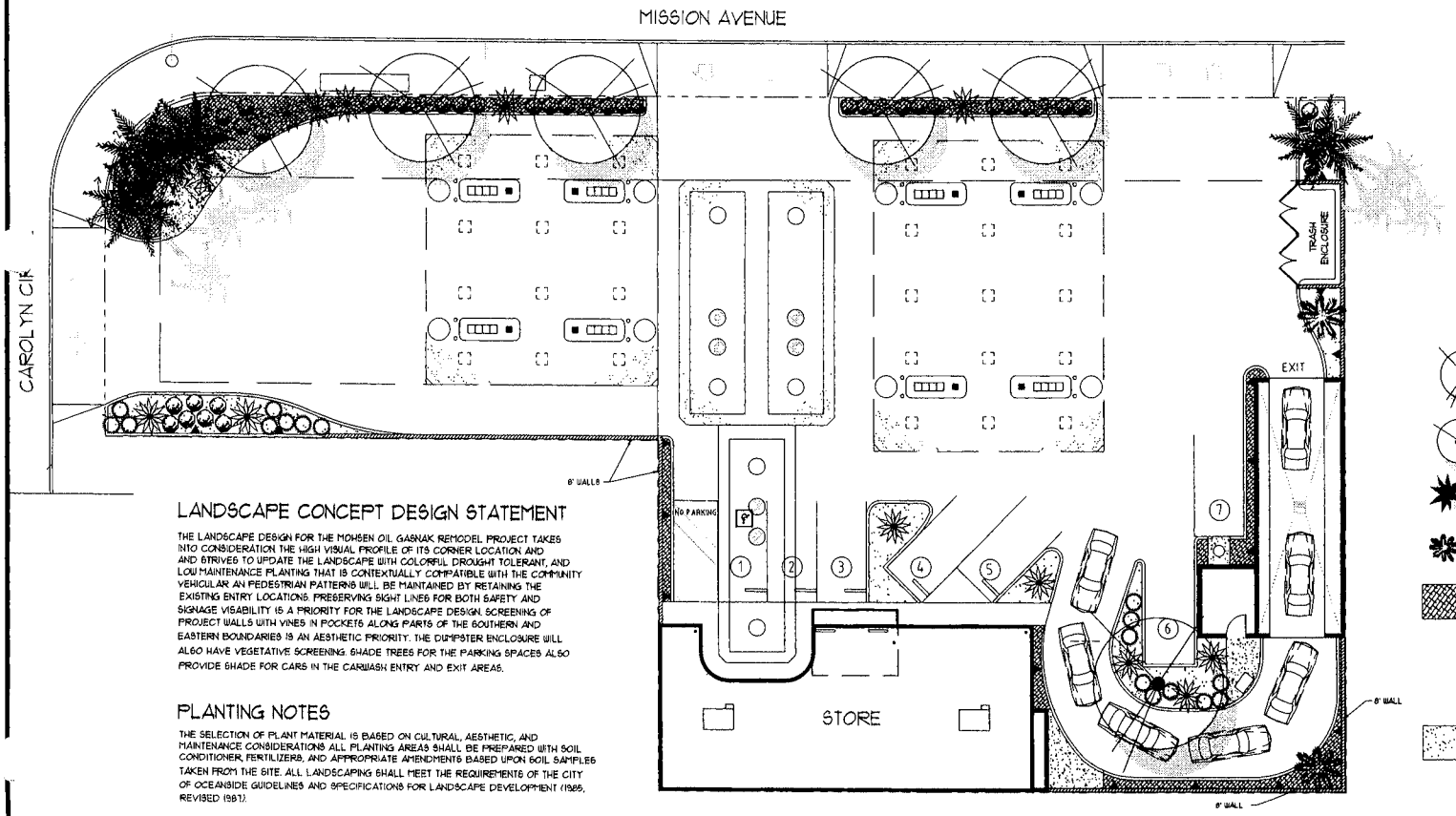

LANDSCAPE CONCEPT DESIGN STATEMENT

THE LANDSCAPE DESIGN FOR THE MOHSEN OIL GASNAK REMODEL PROJECT TAKES INTO CONSIDERATION THE HIGH VISUAL PROFILE OF ITS CORNER LOCATION AND AND STRIVES TO UPDATE THE LANDSCAPE WITH COLORFUL DROUGHT TOLERANT, AND LOW MAINTENANCE PLANTING THAT IS CONTEXTUALLY COMPATIBLE WITH THE COMMUNITY VEHICULAR AN PEDESTRIAN PATTERNS WILL BE MAINTAINED BY RETAINING THE EXISTING ENTRY LOCATIONS. PRESERVING SIGHT LINES FOR BOTH SAFETY AND SIGNAGE VISABILITY IS A PRIORITY FOR THE LANDSCAPE DESIGN. SCREENING OF PROJECT WALLS WITH VINES IN POCKETS ALONG PARTS OF THE SOUTHERN AND EASTERN BOUNDARIES IS AN AESTHETIC PRIORITY. THE DUMPSTER ENCLOSURE WILL ALSO HAVE VEGETATIVE SCREENING. SHADE TREES FOR THE PARKING SPACES ALSO PROVIDE SHADE FOR CARS IN THE CARWASH ENTRY AND EXIT AREAS.

PLANTING NOTES

THE SELECTION OF PLANT MATERIAL IS BASED ON CULTURAL, AESTHETIC, AND MAINTENANCE CONSIDERATIONS. ALL PLANTING AREAS SHALL BE PREPARED WITH SOIL CONDITIONER, FERTILIZERS, AND APPROPRIATE AMENDMENTS BASED UPON SOIL SAMPLES TAKEN FROM THE SITE. ALL LANDSCAPING SHALL MEET THE REQUIREMENTS OF THE CITY OF OCEANSIDE GUIDELINES AND SPECIFICATIONS FOR LANDSCAPE DEVELOPMENT (1986, REVISED 1987).

IRRIGATION NOTES

AN AUTOMATIC IRRIGATION SYSTEM SHALL BE INSTALLED TO PROVIDE COVERAGE FOR ALL PLANTING AREAS SHOWN ON THE PLAN. LOW PRECIPITATION EQUIPMENT SHALL PROVIDE SUFFICIENT WATER FOR PLANT GROWTH WITH A MINIMUM WATER LOSS DUE TO WATER RUN-OFF. IRRIGATION SYSTEMS SHALL USE HIGH QUALITY, AUTOMATIC CONTROL VALVES, TIMERS AND OTHER NECESSARY IRRIGATION EQUIPMENT
ALL COMPONENTS SHALL BE OF NON-CORROSIVE MATERIAL
ALL DRIP SYSTEMS SHALL BE ADEQUATELY FILTERED AND REGULATED PER THE MANUFACTURER'S RECOMMENDED DESIGN PARAMETERS.
PVC LATERAL LINES SHALL BE BURIED 12" MINIMUM BELOW FINISHED GRADE. PVC CLASS 315 PRESSURE MAINLINE IRRIGATION SHALL BE INSTALLED AS PER MANUFACTURER'S SPECIFICATIONS. ALL LANDSCAPE AND IRRIGATION IMPROVEMENTS SHALL BE INSTALLED AS PER THE PROVISIONS OF THE CITY OF OCEANSIDE ZONING ORDINANCE SECTION 3019 AND THE CITY OF OCEANSIDE LANDSCAPE DESIGN GUIDELINES AND SPECIFICATIONS FOR LANDSCAPE DEVELOPMENT (1986, REVISED 1987) AND WATER CONSERVATION ORDINANCE 91-15.

GENERAL NOTES

THIS CONCEPTUAL LANDSCAPE PLAN DIAGRAMMATICALLY SHOWS PLACEMENT OF PROPOSED PROJECT LANDSCAPING. FINAL LANDSCAPE PLANS SHALL ACCURATELY SHOW PLACEMENT OF TREES, SHRUBS, AND GROUNDCOVERS BASED ON INFORMATION PROVIDED BY THE PROJECT ENGINEER. THIS FINAL LANDSCAPE PLAN SHALL SHOW ALL EASEMENTS THAT MAY AFFECT THE FINAL PLACEMENT OF PROJECT TREES AND SHRUBS.

WALL NOTES

EXISTING SITE WALLS TO BE REPLACED WITH NEW WALLS, DESIGNED TO BE ARCHITECTURALLY COMPATIBLE WITH BUILDING ARCHITECTURE.

PROPOSED SHRUBS, PERENNIALS, & VINES

COMPACT, MOUNDING SHRUBS:
5 GALLON MINIMUM SIZE
PITTOSPORUM CRASSIFOLIUM 'NANA' - NO COMMON NAME
RHAPHIOLEPIS I. 'CLARA' - INDIAN HAWTHORN (WHITE)

FLOWERING VERTICAL ACCENT PERENNIAL:
5 GALLON MINIMUM SIZE
STRELITZIA REGINAE - BIRD OF PARADISE

VERTICAL ACCENT PERENNIAL-3 FOOT MAX HT.:
5 GALLON MINIMUM SIZE
PHORMIUM 'GUARDSMAN' - (MAROON) NEW ZEALAND FLAX

SPREADING VINE:
15 GALLON MINIMUM SIZE
DISTICTIS BUCCINATORIA - BLOOD-RED TRUMPET VINE
TRAIN TO SIDE OF TRASH ENCLOSURE AND WALLS.

PROPOSED TREES & PALMS

MEDIUM-SMALL CANOPY SHADE TREE:
PISTACIA CHINENSIS 'KEITH DAVEY' - CHINESE PISTACHE
24" BOX MINIMUM SIZE

STREET TREES:
CASSIA LEPTOPHYLLA - GOLD MEDALLION TREE OR
24" BOX MINIMUM SIZE

PALMS:
SYAGRUS ROMANZOFFIANUM - 'QUEEN PALM'
8'-Ø' B.T.H.

PHOENIX ROEBELENII - PYGMY DATE
5 GALLON MINIMUM SIZE

FLOWERING, DROUGHT TOLERANT GROUNDCOVER OR PERENNIALS:
1 GALLON MINIMUM SIZE
LANTANA MONTEVIDENSIS - 'PURPLE LANTANA'
ERIGERON KARVINSKIANUS - 'SANTA BARBARA DAISY'
GERANIUM INCANUM - 'CRANESBILL'
HEMEROCALLIS (EVERGREEN) HYBRID - DAYLILY
AGAPANTHUS HYBRID - LILY OF THE NILE

GRASS-LINED FILTRATION AREA
TURF OR NO-MOW FESCUE, AS REQUIRED

SCALE: 1" = 10'

THE LIGHTFOOT PLANNING GROUP
PLANNING
SITE DESIGN
LANDSCAPE ARCHITECTURE
6360 FLEET STREET, STE. 204
CARLSBAD, CA 92009
(760) 603-1334
FAX (760) 603-1335

REGISTERED LANDSCAPE ARCHITECT
JAMES L. TAYLOR
2951
EXP. 12-31-92
STATE OF CALIFORNIA

Mohsen Oil
Gas Station Expansion
Oceanside, CA

Scale: 1"=10'
Date: 09/26/91
Drawn By: ET
Revisions:

Landscape Concept

Job # 964.011

1
1

964.011 Gas Station Expansion

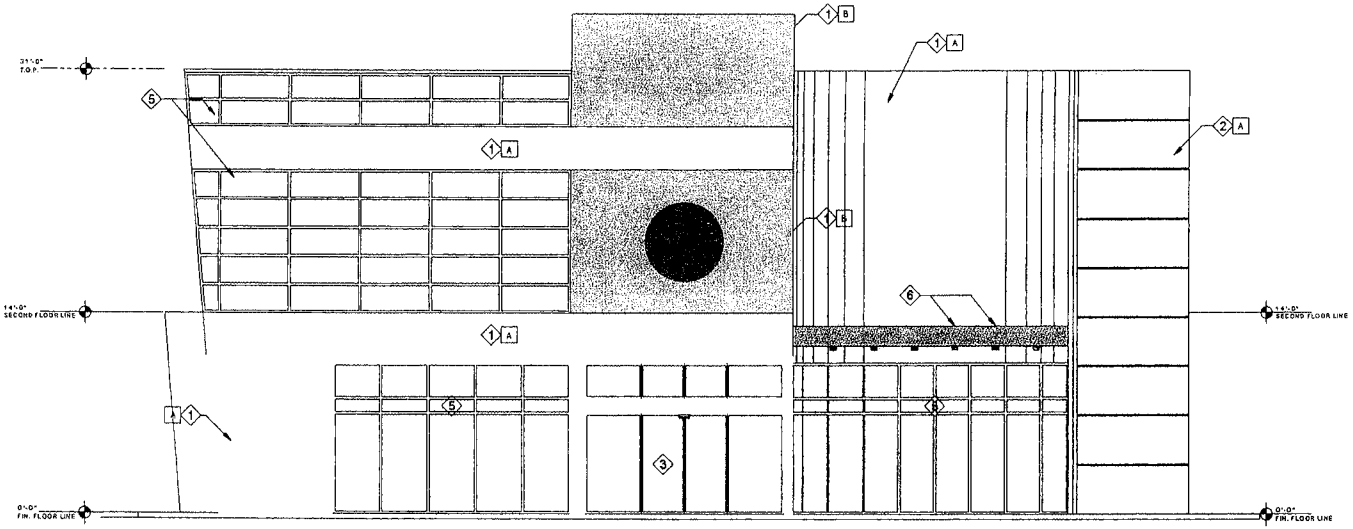

PROPOSED NORTH ELEVATION
SCALE: 1/4" = 1'

MATERIALS LEGEND	
1	EXTERIOR PLASTER
2	PLASTER/METAL CONTROL JOINT
3	AUTOMATIC DOOR SYSTEM
4	EXTERIOR LETTER SIGN (SEPERATE PERMIT REQUIRED)
5	TEMPERED CLEAR GLASS W/ALUMINUM FRAME
6	PERGOLAS (WOOD)
7	STEEL DOOR

COLORS LEGEND	
A	"LA HABRA" X-55 FRENCH VANILLA
B	"LA HABRA" X-580 SIERRA TAN
C	PAIN TO MATCH WALL "LA HABRA" X-55 FRENCH VANILLA
D	GREEN

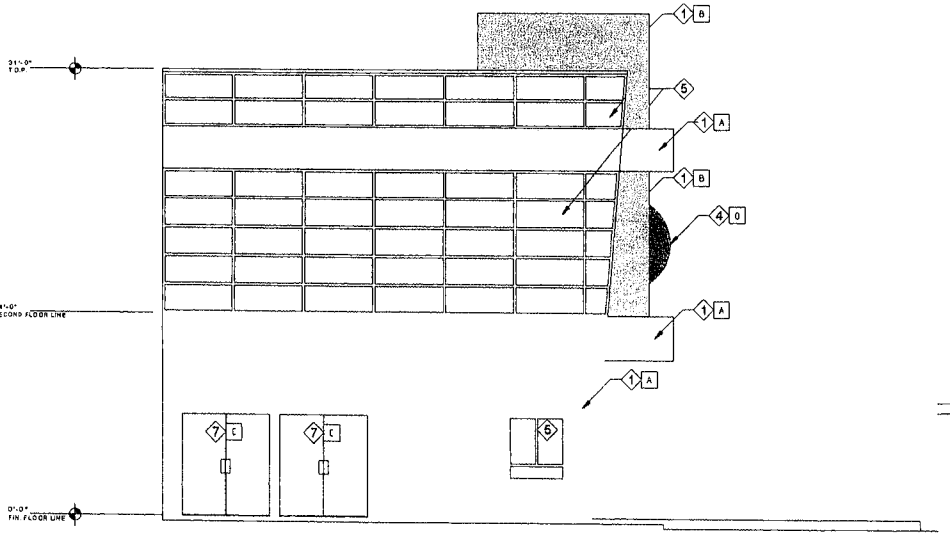

PROPOSED EAST ELEVATION
SCALE: 1/4" = 1'

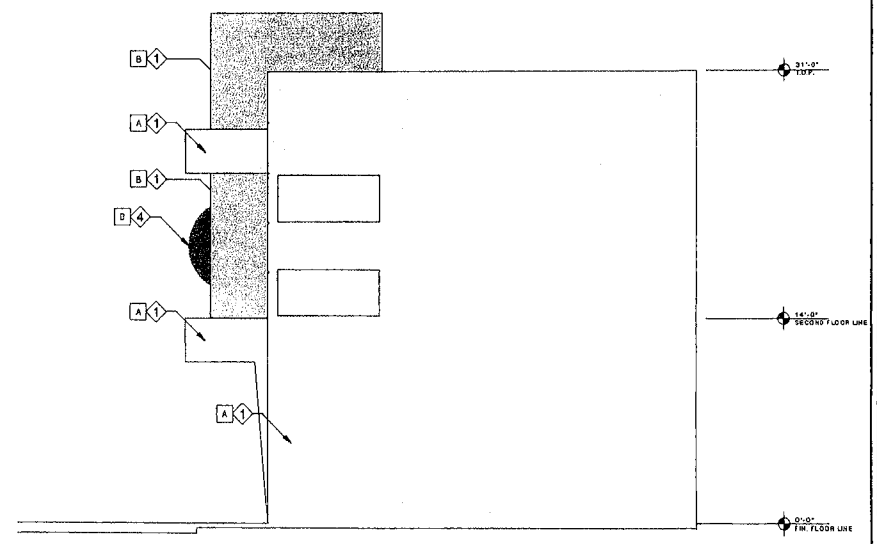

PROPOSED WEST ELEVATION
SCALE: 1/4" = 1'

DIGALERT
CALL TOLL FREE 1-800-642-4133 AT LEAST TWO DAYS BEFORE YOU DIG UNDERGROUND SERVICE ALERT OF SOUTH EAST CALIFORNIA

DOCUMENT PREPARED BY:
GASOLINE RETAIL FACILITIES CONSULTING
ATTN: ANDREW PASZTERKO - ARCHITECT
CALIFORNIA LIC. # C-12253
2055 NORTH ALVARADO STREET,
LOS ANGELES, CALIFORNIA 90039
ph: 323.665.0844, fax: 323.661.0723
andy@gazretail.com

NO	DATE	REVISIONS

PROJECT RELEASE
ISSUED FOR PLAN CHECK
BID RELEASE
CONS'T RELEASE
AS BUILT

ADDRESS: 3213 MISSION AVE. OCEANSIDE, CA

PROJECT TITLE: NEW GASOLINE RETAIL FACILITY WITH FOOD MARKET AND CAR WASH

Gasoline Retail Facilities Consulting

SHEET CONTENTS: ELEVATIONS

Date 06.15.06
Scale AS SHOWN
Drawn JCAD
Job No. GRFC 3611
Sheet A-3
of sheets

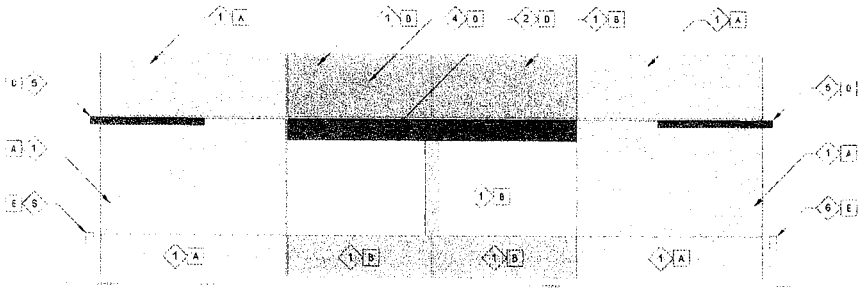

SIDE ELEVATION
SCALE: 1/4" = 1'

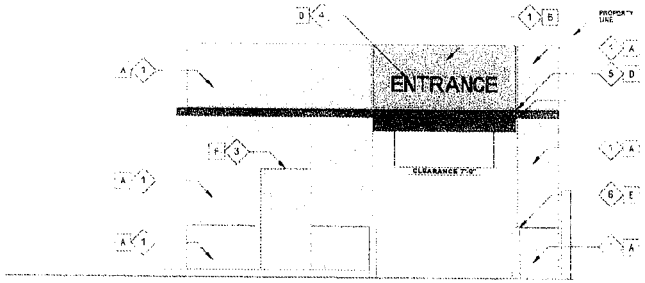

FRONT ELEVATION
SCALE: 1/4" = 1'

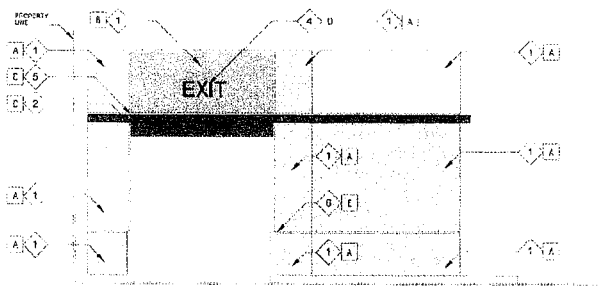

REAR ELEVATION
SCALE: 1/4" = 1'

MATERIALS LEGEND	
1	EXTERIOR STUCCO/METAL CONTROL JOINT
2	ACM METAL PANEL
3	STEEL DOOR
4	INTERNALLY ILLUMINATED CHANNEL LETTERS
5	LIGHTING WIDE FASCIA
6	ø6" BOLLARDS

COLORS LEGEND	
A	"LA HABRA" X-580 SIERRA TAN
B	"LA HABRA" X-55 FRENCH VANILLA
C	PAIN TO MATCH WALL "LA HABRA" X-55 FRENCH VANILLA
D	LINCOLN GREEN 50 GY 16/383 ICI PAINTS- THE MASTER PALETTE
E	WHITE
F	PAIT TO MATCH THE WALL "LA HABRA" X-55 FRENCH VANILLA

DIGALERT

DOCUMENT PREPARED BY
GASOLINE RETAIL FACILITIES CONSULTING
ATTN ANDREW PASZTERKO - ARCHITECT
CALIFORNIA LIC. # C-32751
2955 NORTH ALVARADO STREET,
LOS ANGELES, CALIFORNIA 90039
ph. 323.663.0854, fax 323.661.0723
andy@gasretail.com

NO	DATE	REVISIONS	PROJECT RELEASE
			ISSUED FOR PLAN CHECK
			BID RELEASE
			CONST. REVISION
			AS BUILT

ADDRESS: 3213 MISSION AVE. OCEANSIDE, CA

PROJECT TITLE: NEW GASOLINE RETAIL FACILITY WITH FOOD MARKET AND CAR WASH

Gasoline Retail Facilities Consulting

SHEET CONTENTS: CAR-WASH ELEVATIONS

Date 06.16.06
Scale AS SHOWN
Drawn JOAD
Job No GRFC 351
Sheet A-4
of sheets

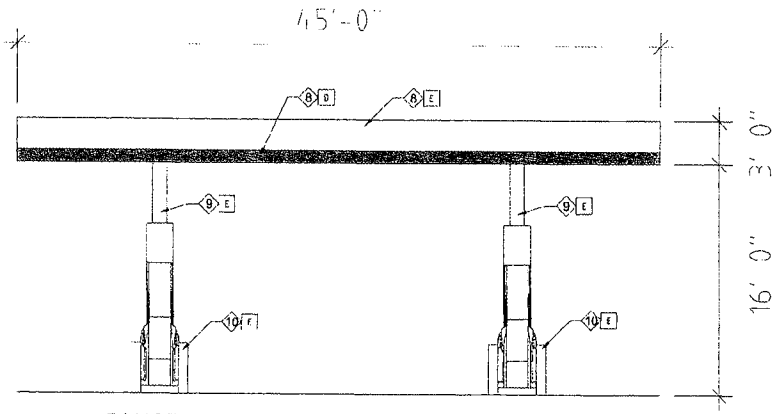

CANOPY 1 WEST ELEVATION
SCALE: 1/4" = 1'

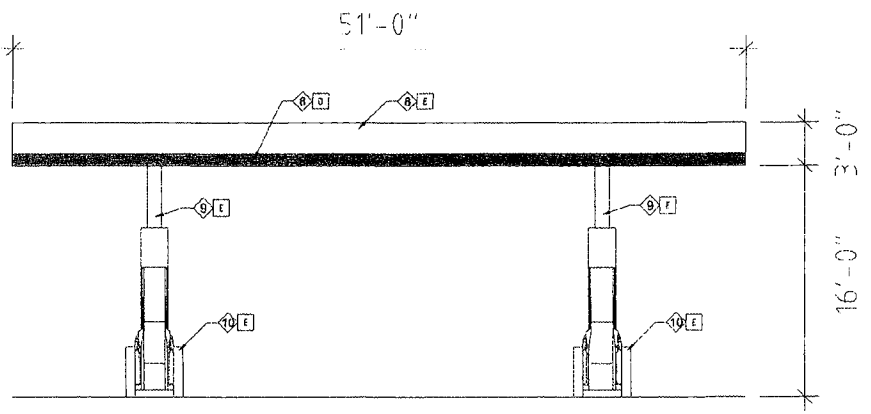

CANOPY 2 WEST ELEVATION
SCALE: 1/4" = 1'

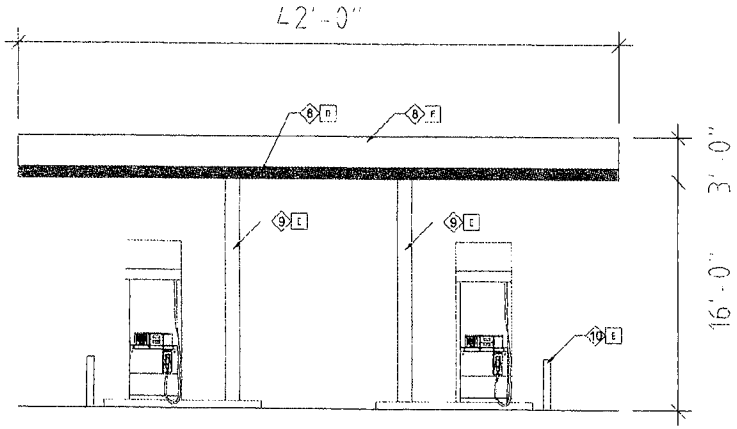

CANOPY 1 NORTH ELEVATION
SCALE: 1/4" = 1'

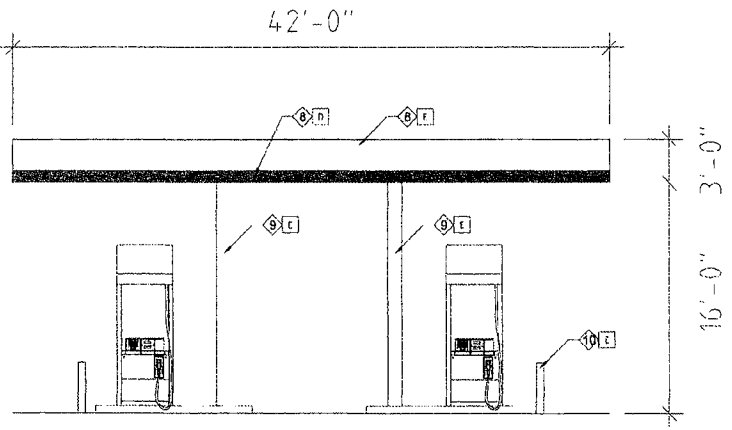

CANOPY 2 NORTH ELEVATION
SCALE: 1/4" = 1'

MATERIALS LEGEND	COLORS LEGEND
EXTERIOR PLASTER	A "LA HABRA" K-15 FRENCH VANILLA
PLASTER/METAL CONTROL JOINT	B "LA HABRA" K-180 SIERRA TAN
AUTOMATIC DOOR SYSTEM	C PAINT TO MATCH "LA HABRA" K-15 FRENCH VANILLA
EXTERIOR LETTER SIGN (SEPERATE PERMIT REQUIRED)	E GREEN
TEMPERED CLEAR GLASS W/ALUMINUM FRAME	F WHITE
PERIODICALS ENDSET	
STEEL BEAM	
RCH CAP/A	
STEEL COLUMN	

DIGALERT
811, TOLL FREE
1-800-422-4133
AT LEAST TWO DAYS
BEFORE YOU DIG
"UNDERGROUND SERVICE ALERT"
OF NORTHERN CALIFORNIA

DOCUMENT PREPARED BY:
GASOLINE RETAIL FACILITIES CONSULTING
ATTN: ANDREW PASTERNO - ARCHITECT
CALIFORNIA LIC. # C-12253
2055 NORTH ALVARADO STREET
LOS ANGELES, CALIFORNIA 90035
ph: 323.665.0844; fax: 323.661.0773
andy@gasretail.com

NO	DATE	REVISIONS

PROJECT RELEASE
ISSUED FOR PLAN CHECK
BID RELEASE
TENANT RELEASE
AS BUILT

ADDRESS
3213 MISSION AVE.
OCEANSIDE, CA

PROJECT TITLE:
NEW GASOLINE RETAIL FACILITY WITH FOOD MARKET AND CAR WASH

Gasoline Retail Facilities Consulting

SHEET CONTENTS
CANOPY ELEVATIONS

Date 02.19.07
Scale AS SHOWN
Drawn JCAC
Job No. GRFC 3611
Sheet A-5
of sheets

ATTACHMENT 4

PLANNING COMMISSION
RESOLUTION NO. 2007-P68

A RESOLUTION OF THE PLANNING COMMISSION OF THE CITY OF OCEANSIDE RECOMMENDING APPROVAL OF A GENERAL PLAN AND ZONING AMENDMENT, DEVELOPMENT PLAN, CONDITIONAL USE PERMITS AND VARIANCES ON CERTAIN REAL PROPERTY IN THE CITY OF OCEANSIDE

APPLICATION NO:	GPA-4-07, ZA-3-03, D-11-03, C-29-06, C-18-07, C-19-07, V-2-07, V-18-07 and V-19-07
APPLICANT:	Mohsen and Susana Arabshahi
LOCATION:	3213 Mission Avenue

THE PLANNING COMMISSION OF THE CITY OF OCEANSIDE, CALIFORNIA DOES RESOLVE AS FOLLOWS:

WHEREAS, there was filed with this Commission a verified petition on the forms prescribed by the Commission requesting a General Plan Amendment, Zone Amendment, Development Plan, Conditional Use Permits and Variances under the provisions of Articles 11, 30, 40, 41, and 43 of the Zoning Ordinance of the City of Oceanside for the following:

a land use change to a portion of the property from a land use designation of Single-Family Dwelling Residential (SFD-R) to General Commercial (GC) and zoning from Residential Single-Family (RS) to Commercial General (CG) and to construct a mini-mart, car wash and additional improvement to an existing service station;

on certain real property described in the project description.

WHEREAS, the Planning Commission, after giving the required notice, did on the17th day of December 2007 conduct a duly advertised public hearing as prescribed by law to consider said application;

WHEREAS, pursuant to the California Environmental Act of 1970, the Planning Commission finds that a Negative Declaration has been prepared stating that if the mitigation measures are met there will not be an adverse impact upon the environment;

WHEREAS, there is hereby imposed on the subject development project certain fees, dedications, reservations and other exactions pursuant to state law and city ordinance;

WHEREAS, pursuant to Gov't Code §66020(d)(1), NOTICE IS HEREBY GIVEN that the project is subject to certain fees, dedications, reservations and other exactions as provided below:

Description	Authority for Imposition	Current Estimate Fee or Calculation Formula
Parkland Dedication/Fee	Ordinance No. 91-10 Resolution No. 06-R0334-1	$3,503 per unit
Drainage Fee	Ordinance No. 85-23 Resolution No. 06-R0334-1	Depends on area (range is $2,843-$15,964 per acre)
Public Facility Fee	Ordinance No. 91-09 Resolution No. 06-R0334-1	$2,072 per unit for residential
School Facilities Mitigation Fee	Ordinance No. 91-34	$2.63 per square foot residential
Traffic Signal Fee	Ordinance No. 87-19 Resolution No. 06-R0334-1	$15.71 per vehicle trip
Thoroughfare Fee (For commercial and industrial please note the .75 per cent discount)	Ordinance No. 83-01 Resolution No. 06-R0334-1	$255 per vehicle trip (based on SANDAG trip generation table available from staff and from SANDAG)
Water System Buy-in Fees	Oceanside City Code §37.56.1 Resolution No. 87-96 Ordinance No. 05-OR 0611-1	Fee based on water meter size. Residential is typically $3,746 per unit.
Wastewater System Buy-in fees	Oceanside City Code § 29.11.1 Resolution No. 87-97 Ordinance No. 05-OR 0610-1	Based on capacity or water meter size. Residential is typically $4,587 per unit.
San Diego County Water Authority Capacity Fees	SDCWA Ordinance No. 2005-03	Based on meter size. Residential is typically $4,154 per unit.
Inclusionary housing in lieu fees—Residential only.	Chapter 14-C of the City Code	$1,000 per development project + $100 per unit plus $10,275 per unit

WHEREAS, the current fees referenced above are merely fee amount estimates of the impact fees that would be required if due and payable under currently applicable ordinances and

resolutions, presume the accuracy of relevant project information provided by the applicant, and are not necessarily the fee amount that will be owing when such fee becomes due and payable;

WHEREAS, unless otherwise provided by this resolution, all impact fees shall be calculated and collected at the time and in the manner provided in Chapter 32B of the Oceanside City Code and the City expressly reserves the right to amend the fees and fee calculations consistent with applicable law;

WHEREAS, the City expressly reserves the right to establish, modify or adjust any fee, dedication, reservation or other exaction to the extent permitted and as authorized by law;

WHEREAS, pursuant to Gov't Code §66020(d)(1), NOTICE IS FURTHER GIVEN that the 90-day period to protest the imposition of any fee, dedication, reservation, or other exaction described in this resolution begins on the effective date of this resolution and any such protest must be in a manner that complies with Section 66020;

WHEREAS, pursuant to Oceanside Zoning Ordinance §4603, this resolution becomes effective 10 days from its adoption in the absence of the filing of an appeal or call for review;

WHEREAS, the Mitigated Negative Declaration together with any comments received, and Mitigation and Monitoring and Reporting Program (MMRP) incorporated into the conditions of approval for the project, were presented to the Planning Commission, and the Planning Commission reviewed and considered the information contained in these documents prior to making a decision on the project.

WHEREAS, the Mitigated Negative Declaration and Mitigation and Monitoring and Reporting Program (MMRP) have been determined to be accurate and adequate documents, which reflect the independent judgment and analysis of the Planning Commission. On the basis of the entire record before it, the Planning Commission finds that there is no substantial evidence that the project, with implementation of the mitigation measures proposed, will have a significant impact on the environment.

WHEREAS, the documents or other material which constitute the record of proceedings upon which the decision is based will be maintained by the City of Oceanside Planning Department, 300 North Coast Highway, Oceanside, California 92054.

WHEREAS, studies and investigations made by this Commission and in its behalf reveal the following facts:

FINDINGS:

For the General Plan Amendment:

1. A General Commercial (GC) Land Use designation is compatible with the existing commercial surroundings and with the existing use of the property. The commercial general designation will allow the legal non conforming use of the existing service station to be compatible with the commercial general designation.
2. Future developments and improvements of the site will be compatible in height and scale with surrounding land uses to the north and north east.

For the Commercial General Zone Amendment:

1. The proposed new Commercial General – CG Zone is in compliance with the surrounding Land Use Designation.
2. The Commercial General – CG Zone is compatible with surrounding Residential and Light Industrial zones and will enable neighborhood commercial uses for the area. The zoning also allows service stations to exist on the property.

For the Development Plan:

1. The site plan and physical design of the project is consistent with the purposes of the Zoning Ordinance, including Articles 11, 30, and 43 with the exemption of the required variances.
2. The Development Plan conforms to the General Plan of the City of Oceanside, including the goals and objectives of Community Development Sections 2.23, 1.22, and 1.23 the Land Use Element of the General Plan.
3. The area covered by the Development Plan can be adequately, reasonably and conveniently served by existing and planned public services, utilities, and public facilities.
4. The service station, mini-mart and car wash compatible with the existing and potential development on adjoining properties and the surrounding Airport Neighborhood.

For the Conditional Use Permits:

1. To allow the remodel and new construction of a service station. The remodel and construction will consists of construction of a gasoline canopies, as drive through car wash and the construction of a newly developed mini-mart.

For the Variances:

1. The encroachment into the required 10-foot corner side yard and 15-foot interior setback areas.
2. A 10-foot minimum landscaped setback is required by the zoning ordinance along Mission Avenue and Carolyn Circle. At least 50 percent of each required setback area must be landscaped and the project proposes an approximate percentage of 40 percent landscaping within the setback areas.
3. The applicant has requested to permit seven striped parking stalls that are below the required 15 parking stalls, pursuant the zoning ordinance section 3100.

NOW, THEREFORE, BE IT RESOLVED that the Planning Commission does hereby approve the Mitigated Negative Declaration and adopt the mitigation measures provided therein, and recommend approval to the City Council of General Plan Amendment (GPA-4-07), Zone Amendment (ZA-3-03), Development Plan (D-11-03), Conditional Use Permits (C-29-06, C-18-07, C-19-07) and Variances (V-2-07, V-5-07, V-6-07) subject to the following conditions:

Building:

1. Applicable Building Codes and Ordinances shall be based on the date of submittal for Building Division plan check. (Currently the 2001 California Code of Regulations, and 2004 California Electrical Code)
2. The granting of approval under this action shall in no way relieve the applicant/project from compliance with all State and Local building codes.
3. Site development, parking, access into buildings and building interiors shall comply with the State's Disabled Accessibility Regulations. (2001 California Building Code (CBC), Chapter 11B).
4. The building plans for this project are required by State law to be prepared by a licensed architect or engineer and must be in compliance with this requirement prior to submittal for building plan review.
5. All electrical, communication, CATV, etc. service lines within the exterior lines of the property shall be underground (City Code Sec. 6.30).

6. All outdoor lighting must comply with Chapter 39 of the City Code (Light Pollution Ordinance). Where color rendition is important, high-pressure sodium, metal halide or other such lights may be utilized and shall be shown on building and electrical plans.

7. Compliance with the Federal Clean Water Act (BMP's) must be demonstrated on the plans.

8. The developer shall monitor, supervise and control all building construction and supporting activities so as to prevent these activities from causing a public nuisance, including, but not limited to, strict adherence to the following:

   a) Building construction work hours shall be limited to between 7:00 a.m. and 6:00 p.m. Monday through Friday, and on Saturday from 7:00 a.m. to 6:00 p.m. for work that is not inherently noise-producing. Examples of work not permitted on Saturday are concrete and grout pours, roof nailing and activities of similar noise-producing nature. No work shall be permitted on Sundays and Federal Holidays (New Year's Day, Memorial Day, July 4th, Labor Day, Thanksgiving Day, Christmas Day) except as allowed for emergency work under the provisions of the Oceanside City Code Chapter 38 (Noise Ordinance).

   b) The construction site shall be kept reasonably free of construction debris as specified in Section 13.17 of the Oceanside City Code. Storage of debris in approved solid waste containers shall be considered compliance with this requirement. Small amounts of construction debris may be stored on-site in a neat, safe manner for short periods of time pending disposal.

9. Separate/unique addresses will/may be required to facilitate utility releases. Verification that the addresses have been properly assigned by the City's Planning Division must accompany the Building Permit application.

10. A complete Soils Report, Structural Calculations, & Energy Calculations/documentation will be required at time of plans submittal to the Building Division for plan check.

11. If this project is submitted after Jan. 1, 2008 it must meet the requirements of the newly adopted ICC codes.

//////////

//////////

Fire Prevention:

12. A minimum fire flow of 1500 gallons per minute shall be provided.
13. In accordance with the California Fire Code Sec. 901.4.4, approved address for commercial, industrial, and residential occupancies shall be placed on the structure in such a position as to be plainly visible and legible from the street or roadway fronting the property. Numbers shall be contrasting with their background.
14. Submit a copy of as built plans on a CD for all projects on the job site before final occupancy.
15. Buildings shall meet Oceanside Fire Department's current codes at the time of building permit application.
16. Future development of the property will require compliance with all applicable Fire Department Standards.

Engineering:

17. If the project involves demolition of an existing structure or surface improvements, the grading plans shall be submitted and erosion control plans be approved by the City Engineer prior to the issuance of a demolition permit. No demolition shall be permitted without an approved erosion control plan.
18. Vehicular access rights to Mission Avenue and Carolyn Circle Drive shall be relinquished to the City from all this lot, except the proposed driveways as shown on the site plan.
19. All right-of-way alignments, street dedications, exact geometrics and widths shall be dedicated and improved as required by the City Engineer.
20. Design and construction of all improvements shall be in accordance with standard plans, specifications of the City of Oceanside and subject to approval by the City Engineer.
21. Prior to issuance of a building permit all improvement requirements shall be covered by a development agreement and secured with sufficient improvement securities or bonds guaranteeing performance and payment for labor and materials, setting of monuments, and warranty against defective materials and workmanship.
22. Prior to issuance of a building permit a phasing plan (if any) for the construction of public and private improvements including landscaping, shall be approved by the City Engineer.
23. The developer shall provide public street dedication as required to serve the property.

24. The approval of the project shall not mean that closure, vacation, or abandonment of any public street, right-of-way, easement, or facility is granted or guaranteed to the developer. The developer is responsible for applying for all closures, vacations, and abandonments as necessary. The application(s) shall be reviewed and approved or rejected by the City of Oceanside under separate process (es) per codes, ordinances, and policies in effect at the time of the application.

25. A construction-phasing plan (if applicable) for the construction of on-site public and private improvements shall be reviewed and approved by the City Engineer prior to the issuance of any grading or improvement permits. Prior to the issuance of any building permits all offsite or frontage improvements including landscaping and any required streets or arterials shall be under construction to the satisfaction of the City Engineer. All improvements shall be completed prior to issuance of any certificates of occupancy.

26. Where proposed off-site improvements, including but not limited to slopes, public utility facilities, and drainage facilities, are to be constructed, the applicant shall, at his own expense, obtain all necessary easements or other interests in real property and shall dedicate the same to the City of Oceanside as required. The applicant shall provide documentary proof satisfactory to the City of Oceanside that such easements or other interest in real property have been obtained prior to issuance of any grading, building or improvement permit for the project. Additionally, the City of Oceanside, may at its sole discretion, require that the applicant obtain at his sole expense a title policy insuring the necessary title for the easement or other interest in real property to have vested with the City of Oceanside or the applicant, as applicable.

27. Prior to the issuance of a grading permit, the developer shall notify and host a neighborhood meeting with all of the area residents located within 300 feet of the project site, and residents of property along any residential streets to be used as a "haul route", to inform them of the grading and construction schedule, haul routes, and to answer questions.

28. The developer shall monitor, supervise and control all construction and construction-supportive activities, so as to prevent these activities from causing a public nuisance, including but not limited to, insuring strict adherence to the following:

a) Dirt, debris and other construction material shall not be deposited on any public street or within the City's stormwater conveyance system

b) All grading and related site preparation and construction activities shall be limited to the hours of 7:00 a.m. to 6:00 p.m., Monday through Friday. No engineering related construction activities shall be conducted on Saturdays, Sundays or legal holidays unless written permission is granted by the City Engineer with specific limitations to the working hours and types of permitted operations. All on-site construction staging areas shall be as far as possible (minimum 100 feet) from any existing residential development. Because construction noise may still be intrusive in the evening or on holidays, the City of Oceanside Noise Ordinance also prohibits "any disturbing excessive or offensive noise which causes discomfort or annoyance to reasonable persons of normal sensitivity."

c) The construction site shall accommodate the parking of all motor vehicles used by persons working at or providing deliveries to the site.

d) A haul route shall be obtained at least 7 days prior the start of hauling operations and must be approved by the City Engineer. Hauling operations shall be 8:00 a.m. to 3:30 p.m. unless approved otherwise.

29. A traffic control plan shall be prepared according to the City traffic control guidelines and be submitted to and approved by the City Engineer prior to the start of work within open City rights-of-way. Traffic control during construction of streets that have been opened to public traffic shall be in accordance with construction signing, marking and other protection as required by the Caltrans Traffic Manual and City Traffic Control Guidelines. Traffic control plans shall be in effect from 8:00 a.m. to 3:30 p.m. unless approved otherwise.

30. Approval of this development project is conditioned upon payment of all applicable impact fees and connection fees in the manner provided in chapter 32B of the Oceanside City Code. All drainage fees, traffic signal fees and contributions, highway thoroughfare fees, park fees, reimbursements, and other applicable charges, fees and deposits shall be paid prior to recordation of the map or the issuance of any building permits, in accordance with City Ordinances and policies. The developer shall also be required to join into, contribute,

or participate in any improvement, lighting, or other special district affecting or affected by this project. Approval of the tentative map (project) shall constitute the developer's approval of such payments, and his agreement to pay for any other similar assessments or charges in effect when any increment is submitted for final map or building permit approval, and to join, contribute, and/or participate in such districts.

31. Mission Avenue and Carolyn Circle Drive shall be improved with curbs and gutters and sidewalks.

32. Mission Avenue and Carolyn Circle Drive shall provide a minimum of 10 feet parkway between the face of curb and the right-of-way line. Sidewalk improvements shall comply with ADA requirements.

33. Relocate the existing bus stop to the satisfaction of the North County Transit District (NCTD).

34. Sight distance requirements at the project driveways along Mission Avenue and Carolyn Circle shall conform to the corner sight distance criteria as provided by SDRSD DS-20A and or DS-20B.

35. Streetlights shall be maintained and installed on all public streets per City Standards. The system shall provide uniform lighting, and be secured prior to occupancy. The developer shall pay all applicable fees, energy charges, and/or assessments associated with City-owned (LS-2 rate schedule) streetlights and shall also agree to the formulation of, or the annexation to, any appropriate street lighting district.

36. The Geotechnical Consultant shall review the foundation/grading/site work plans to ascertain that plans are in conformance with the recommendations contained in their Geotechnical Report.

37. Prior to approval of the grading plans, the developer shall contract with a geotechnical engineering firm to perform a field investigation of the existing pavement on all streets adjacent to the project boundary. The limits of the study shall be half-street plus 12 feet along the project's frontage. The field investigation shall include a minimum of one pavement boring per every 50 linear feet of street frontage. Should the existing AC thickness be determined to be less than three inches or without underlying Class II base

material, the developer shall remove and reconstruct the pavement section as determined by the pavement analysis submittal process detailed in Item No. 2 below.

38. Upon review of the pavement investigation, the City Engineer shall determine whether the developer shall: 1) Repair all failed pavement sections, header cut and grind per the direction of the City Engineer, and construct a two-inch thick rubberized AC overlay; or 2) Perform R-value testing and submit a study that determines if the existing pavement meets current City standards/traffic indices. Should the study conclude that the pavement does not meet current requirements, rehabilitation/mitigation recommendations shall be provided in a pavement analysis report, and the developer shall reconstruct the pavement per these recommendations, subject to approval by the City Engineer.

39. Mission Avenue and Carolyn Circle Drive shall be improved as required the City Engineer.

40. Pavement sections for all streets, alleys, driveways and parking areas shall be based upon approved soil tests and traffic indices. The pavement design is to be prepared by the developer's soil engineer and must be approved by the City Engineer, prior to paving.

41. Any existing broken pavement, concrete curb, gutter or sidewalk or any damaged during construction of the project, shall be repaired or replaced as directed by the City Engineer.

42. The undergrounding of the existing overhead utilities may be deferred. The developer shall pay an in-lieu fee, based upon the length of utilities to be placed underground, and at the rate in effect at building permit issuance or as established by the City Engineer per Section 901.G. of the Subdivision Ordinance (R91-166) and as required by the City Engineer and current City policy.

43. The developer shall comply with all the provisions of the City's cable television ordinances including those relating to notification as required by the City Engineer.

44. The developer shall install two-inch PVC conduit, together with 1/4-inch pull-rope and pull-boxes at 400 feet intervals for future signal interconnect cable on all arterial-level or above, streets.

45. Grading and drainage facilities shall be designed and installed to adequately accommodate the local stormwater runoff and shall be in accordance with the City's Engineers Manual and as directed by the City Engineer.

46. The applicant shall obtain any necessary permits and clearances from all public agencies having jurisdiction over the project due to its type, size, or location, including but not limited to the U. S. Army Corps of Engineers, California Department of Fish & Game, U. S. Fish and Wildlife Service and/or San Diego Regional Water Quality Control Board (including NPDES), San Diego County Health Department, prior to the issuance of grading permits.

47. Prior to any grading of any part of the tract or project, a comprehensive soils and geologic investigation shall be conducted of the soils, slopes, and formations in the project. All necessary measures shall be taken and implemented to assure slope stability, erosion control, and soil integrity. No grading shall occur until a detailed grading plan, to be prepared in accordance with the Grading Ordinance and Zoning Ordinance, is approved by the City Engineer.

48. This project shall provide year-round erosion control including measures for the site required for the phasing of grading. Prior to the issuance of grading permit, an erosion control plan, designed for all proposed stages of construction, shall be reviewed, secured by the applicant with cash securities and approved by the City Engineer.

49. A precise grading and private improvement plan shall be prepared, reviewed, secured and approved prior to the issuance of any building permits. The plan shall reflect all pavement, flatwork, landscaped areas, special surfaces, curbs, gutters, medians, striping, and signage, footprints of all structures, walls, drainage devices and utility services. Parking lot striping and any on-site traffic calming devices shall be shown on all Precise Grading and Private Improvement Plans.

50. Landscaping plans, including plans for the construction of walls, fences or other structures at or near intersections, must conform to intersection sight distance requirements. Landscape and irrigation plans shall be approved by the City Engineer prior to the issuance of occupancy permits, and a pre-construction meeting held, prior to the start of any improvements.

51. Landscaping plans, including plans for the construction of walls, fences or other structures at or near intersections, must conform to intersection sight distance requirements. Landscape and irrigation plans for disturbed areas must be submitted to the City Engineer prior to the issuance of a preliminary grading permit and approved by the City Engineer prior to the issuance of occupancy permits. Frontage and median landscaping shall be installed prior to the issuance of any certificates of occupancy. Any project fences, sound or privacy walls and monument entry walls/signs shall be shown on, bonded for and built from the landscape plans. These features shall also be shown on the precise grading plans for purposes of location only. Plantable, segmental walls shall be designed, reviewed and constructed by the grading plans and landscaped/irrigated through project landscape plans. All plans must be approved by the City Engineer and a pre-construction meeting held, prior to the start of any improvements.

52. The drainage design on the project is conceptual only. The final design shall be based upon a hydrologic/hydraulic study to be approved by the City Engineer during final engineering. All drainage picked up in an underground system shall remain underground until it is discharged into an approved channel, or as otherwise approved by the City Engineer. All public storm drains shall be shown on City standard plan and profile sheets. All storm drain easements shall be dedicated where required. The applicant shall be responsible for obtaining any off-site easements for storm drainage facilities.

53. Storm drain facilities shall be designed and located such that the inside travel lanes on streets with collector or above design criteria shall be passable during conditions of a 100-year frequency storm.

54. Sediment, silt, grease, trash, debris, and/or pollutants shall be collected on-site and disposed of in accordance with all state and federal requirements, prior to stormwater discharge either off-site or into the City drainage system.

55. The development shall comply with all applicable regulations established by the United States Environmental Protection Agency (USEPA) as set forth in the National Pollutant Discharge Elimination System (NPDES) permit requirements for urban runoff and stormwater discharge and any regulations adopted by the City pursuant to the NPDES. Regulations or requirements. Further, the applicant may be required to file a Notice of

Intent with the State Water Resources Control Board to obtain coverage under the NPDES. General Permit for Storm Water Discharges Associated with Construction Activity and may be required to implement a Storm Water Pollution Prevention Plan (SWPPP) concurrent with the commencement of grading activities. SWPPPs include both construction and post construction pollution prevention and pollution control measures and identify funding mechanisms for post construction control measures. The developer shall comply with all the provisions of the Clean Water Program during and after all phases of the development process, including but not limited to: mass grading, rough grading, construction of street and landscaping improvements, and construction of dwelling units. The applicant shall design the Project's storm drains and other drainage facilities to include Best Management Practices to minimize non-point source pollution, satisfactory to the City Engineer.

56. Upon acceptance of any fee waiver or reduction by the developer, the entire project will be subject to prevailing wage requirements as specified by Labor Code section 1720(b)(4). The developer shall agree to execute a form acknowledging the prevailing wage requirements prior to the granting of any fee reductions or waivers.

57. The developer shall prepare and submit an Operations & Maintenance (O&M) Plan to the City Engineer with the first submittal of engineering plans. The O&M Plan shall be prepared by the applicant's Civil Engineer. It shall be directly based on the project's Storm Water Mitigation Plan (SWMP) previously approved by the project's approving authority (Planning Commission/City Council). At a minimum the O&M Plan shall include the designated responsible parties to manage the stormwater BMP(s), employee's training program and duties, operating schedule, maintenance frequency, routine service schedule, specific maintenance activities, copies of resource agency permits, cost estimate for implementation of the O&M Plan and any other necessary elements.

58. The developer shall enter into a City-Standard Stormwater Facilities Maintenance Agreement with the City obliging the project proponent to maintain, repair and replace the Storm Water Best Management Practices (BMPs) identified in the project's approved Storm Water Mitigation Plan (SWMP), as detailed in the O&M Plan into perpetuity.

The Agreement shall be approved by the City Attorney prior to issuance of any precise grading permit and shall be recorded at the County Recorder's Office prior to issuance of any building permit. Security in the form of cash (or certificate of deposit payable to the City) or an irrevocable, City-Standard Letter of Credit shall be required prior to issuance of a precise grading permit. The amount of the security shall be equal to 10 years of maintenance costs, as identified by the O&M Plan. The applicant's Civil Engineer shall prepare the O&M cost estimate.

59. At a minimum, maintenance agreements shall require the staff training, inspection and maintenance of all BMPs on an annual basis. The project proponent shall complete and maintain O&M forms to document all maintenance activities. Parties responsible for the O&M plan shall retain records at the subject property for at least five years. These documents shall be made available to the City for inspection upon request at any time.

60. The Agreement shall include a copy of executed on-site and off-site access easements necessary for the operation and maintenance of BMPs that shall be binding on the land throughout the life of the project to the benefit of the party responsible for the O&M of BMPs, until such time that the storm water BMP requiring access is replaced, satisfactory to the City Engineer. The agreement shall also include a copy of the O&M Plan approved by the City Engineer.

61. The BMPs described in the project's approved Storm Water Mitigation Plan (SWMP) shall not be altered in any way, shape or form without formal approval by either an Administrative Substantial Conformance issued by the Development Services Department/Planning Division or the project's final approving authority (Planning Commission/City Council) at a public hearing. The determination of whatever action is required for changes to a project's approved SWMP shall be made by the Development Services Department/Planning Division.

62. The approval of the project shall not mean that closure, vacation, or abandonment of any public street, right-of-way, easement, or facility is granted or guaranteed to the developer. The developer is responsible for applying for all closures, vacations, and abandonments as necessary. The application(s) shall be reviewed and approved or

rejected by the City of Oceanside under separate process (es) per codes, ordinances, and policies in effect at the time of the application.

63. Prior to approval of the grading/improvement plans the applicant shall have a clearance letter from the County of San Diego Health Department, Hazardous Materials Division stating that the site is suitable for its intended use and has mitigated any existing hazardous materials."

Planning:

64. This Development Plan (D-11-03), Conditional Use Permits (C-29-06, C-18-07, C-19-07) and Variances (V-2-07, V-5-07, V-6-07) approvals shall lapse two years after the effective date of approval.

a) Unless a grading permit has been issued and grading has been substantially completed and or a building permit has bee issued, and construction diligently pursued; or an occupancy permit has been issued; or

b) Unless a time extension is granted by the Planning Commission.

c) The Development Plan (D-11-03) shall be effective for an additional 24 months from the date of recordation of the Final Map.

65. This Development Plan (D-11-03) approves only the construction of two gasoline canopies, a mini-mart, drive through carwash and additional improvements as shown on the plans and exhibits presented to the Planning Commission for review and approval. No deviation from these approved plans and exhibits shall occur without Planning Division approval. Substantial deviations shall require a revision to the Development Plan (D-11-03) or a new Development Plan.

66. This Conditional Use Permit shall be called for review by the Planning Commission if complaints are filed and verified as valid by the City Planner or the Code Enforcement Officer concerning the violation of any of the approved conditions or the project assumptions demonstrated under the application approval.

67. This Conditional Use Permit shall expire on December 17, 2009 unless implemented as required by the Zoning Ordinance.

68. A covenant or other recordable documents approved by the City Attorney shall be prepared by the property owner and recorded prior to the issuance of a building permit. The covenant shall provide that the property is subject to this resolution, and shall generally list the conditions of approval.

69. Prior to the transfer of ownership and or operation of the site the owner shall provide a written copy of the applications, staff report and resolutions for the project to the new owner and or operator. This notification's provision shall run with the life of the project and shall be recorded as a covenant on the property.

70. Failure to meet any conditions of approval for this development shall constitute a violation of the Development Plan and Conditional Use Permits.

71. Unless expressly waived, all current zoning standards and City ordinances and policies in effect at the time building permits are issued are required to be met by this project. The approval of this project constitutes the property owner's and developer's agreement with all statements in the Description and Justification, and other materials and information submitted with this application, unless specifically waived by an adopted condition of approval.

72. The developer is prohibited from entering into any agreement with a cable television franchisee of the City, which gives such franchisee exclusive rights to install, operate, and or maintain its cable television system in the development.

73. The property owner, permittee or any successor-in-interest shall defend, indemnify and old harmless the City of Oceanside, its agents, officers or employees from any claim, action or proceeding against the City, its agents, officers, or employees to attack, set aside, void or annul an approval of the City, concerning Development Plan (D-11-03), Conditional Use Permits (C-15-03, C-18-07, C-19-07) and Variances (V-2-07, V-5-07, V-6-07). The City will promptly notify the property owner of any such claim, action or proceeding against the City and will cooperate fully in the defense. If the City fails to promptly notify the applicant of any such claim action or proceeding or fails to cooperate fully in the defense, the applicant shall not, thereafter, be responsible to defend, indemnify or hold harmless the City.

74. All landscaping, fences, walls, etc. on the site, in medians in the public right-of-way and in any adjoining public parkways shall be permanently maintained by the owner, his assigns or any successors-in-interest in the property. The maintenance program shall include normal care and irrigation of the landscaping; repair and replacement of plant materials; irrigation systems as necessary; and general cleanup of the landscaped and open areas, parking lots and walkways, walls, fences, etc. Failure to maintain landscaping shall result in the City taking all appropriate enforcement actions by all acceptable means including but not limited to citations and/or actual work with costs charged to or recorded against the owner. This condition shall be recorded with the covenant required by this resolution.

75. Landscape plans meeting the criteria of the City of Oceanside Guidelines and Specifications for Landscape Developments 1985, addenda 1997, Xeriscape Principles; Article V, Chapter 37, Water Conservation Ordinance No. 91-15, comply with Zoning Ordinance and shall be reviewed and approved by the City Engineer prior to the issuance of building permits. Landscaping shall not be installed until bonds have been posted, fees paid, and plans signed for final approval. The following special landscaping requirements shall be met:

a) Street trees shall be located 30'-0" on center; the palm trees shall be a minimum eight-foot brown trunk height, the Cassia leptophylla shall be 24-inch box size. Right-of-way trees and understory landscape shall be irrigated and maintained by the owner of the property in perpetuity to meet the satisfaction of the City Engineer.

b) The street canopy tree shall be Cassia leptophylla and the on-site trees Pistachia chinensis.

c) Landscape plans shall match all plans affiliated with the project and comply with SWMP requirements.

76. The hours-of-operation for the Carwash will be limited to 6:00 a.m. to 9:00 p.m. everyday.

77. The hours-of-operation for retail sales within the mini-mart will be twenty four hours and will be subject to review by the Planning Commission if complaints are evident.

Mitigation Measures:

78. The equipment for inside the car wash shall be clearly identified on the plans before building permit submittal. The equipment proposed is the Ryko Ultrasonic 2001 wash system with automatic bi-fold doors and shall be maintained and replaced if needed.

79. The car wash bay shall be equipped with Ryko bi-fold doors shall be equipped with appropriate seals at the perimeters such that minimal sound will penetrate to the exterior. A brush type seals shall be avoided. The doors shall be synchronized such that they do not open until all machinery is completely idle.

80. The support equipment associated with car wash machinery compressor shall be housed inside the mechanical equipment room attached to the car wash shell, with no direct vents to the outside which would allow noise emissions.

81. The car wash shell shall contain no vents, gaps, penetrations or other openings that will allow noise to penetrate to the exterior of the shell.

82. The existing perimeter wall shall be raised to the height of the car wash bay at both the entrance and exit to the bay, sloping down to its existing height over a distance of about twenty feet. A new construction wall with these characteristics may be installed in lieu of modifying the existing perimeter wall.

83. Failure to meet any conditions of approval for this development shall constitute a violation of the Conditional Use Permit.

84. Unless expressly waived, all current zoning standards and City ordinances and policies in effect at the time building permits are issued are required to be met by this project. The approval of this project constitutes the applicant's agreement with all statements in the project Description and Justification and other materials and information submitted with this application, unless specifically waived by an adopted condition of approval.

85. The final design and construction of the facility shall be in accordance with the plans representing the approved project and the conditions of approval. These requirements shall be shown and demonstrated on the plans submitted for grading permits and shall be reviewed and approved by the City Planner prior to the issuance of building permits.

86. Prior to the issuance of building permits, compliance with the applicable provisions of the City's anti-graffiti (Ordinance No. 93-19/Section 20.25 of the City Code) shall be reviewed and approved by the Planning Division. These requirements, including the obligation to remove or cover with matching paint all graffiti within 24 hours, shall be noted on the Landscape Plan and shall be recorded in the form of a covenant affecting the subject property.

87. No metallic and/or reflective paints or surfaces shall be permitted.

88. All signage shall be in accordance with the plans representing the approved project. The signage shall be shown on the plans submitted for building permits and shall be reviewed and approved by the City Planner prior to the issuance of building permits.

Water Utilities:

89. The developer will be responsible for developing all water and sewer utilities necessary to develop the property. Any relocation of water and/or sewer utilities is the responsibility of the developer and shall be done by an approved licensed contractor at the developer's expense.

90. The property owner will maintain private water and wastewater utilities located on private property.

91. Water services and sewer laterals constructed in existing right-of-way locations are to be constructed by approved and licensed contractors at developer's expense.

92. All Water and Wastewater construction shall conform to the most recent edition of the Water, Sewer, and Reclaimed Water Design and Construction Manual or as approved by the Water Utilities Director.

93. All public water and/or sewer facilities not located within the public right-of-way shall be provided with easements sized according to the Water, Sewer, and Reclaimed Water Design and Construction Manual. Easements shall be constructed for all weather access.

94. No trees, structures or building overhang shall be located within any water or wastewater utility easement.

95. A separate irrigation meter and approved backflow prevention device is required and shall be displayed on the plans.

96. If a property goes through a zone change and an increase in density occurs, a water and sewer study must be prepared by the developer at the developer's expense, and reviewed and approved by the Water Utilities Department.

97. An Inspection Manhole, described by the Water, Sewer, and Reclaimed Water Design and Construction Manual, shall be installed in each building sewer lateral and the location shall be called out on the approved Improvement Plans.

98. A Grease, Oil, and Sand Interceptor, described by the Uniform Plumbing Code, relating to garages and wash racks shall be installed in each building sewer in an appropriate location and shall be maintained by the property owner. The location shall be called out on the approved Improvement Plans.

99. If a restaurant or food service tenant occupies the property; a Grease, Oil, and Sand Interceptor shall be installed in each building sewer in an appropriate location and shall be maintained by the property owner. The location shall be called out on the approved Building Plans.

//////////////

//////////////

//////////////

//////////////

//////////////

//////////////

//////////////

//////////////

//////////////

//////////////

//////////////

//////////////

//////////////

//////////////

100. Water and Wastewater Buy-in fees and the San Diego County Water Authority Fees are to be paid to the City and collected by the Water Utilities Department at the time of Building Permit issuance.

PASSED AND ADOPTED Resolution No. 2007-P68 on December 17, 2007 by the following vote, to wit:

AYES: Martinek, Parker, Neal, Troisi, Balma and Bertheaud

NAYS: None

ABSENT: Horton

ABSTAIN: None

Dennis Martinek, Chairman
Oceanside Planning Commission

ATTEST:

Jerry Hittleman, Secretary

I, JERRY HITTLEMAN, Secretary of the Oceanside Planning Commission, hereby certify that this is a true and correct copy of Resolution No. 2007-P68.

Dated: December 17, 2007

ATTACHMENT 5

PLANNING COMMISSION *STAFF REPORT*

DATE: December 17, 2007

TO: Chairman and Members of the Planning Commission

FROM: Development Services Department/Planning Division

SUBJECT: **GENERAL PLAN AMENDMENT (GPA-4-07), ZONE AMENDMENT (ZA-3-03), DEVELOPMENT PLAN (D-11-03), CONDITIONAL USE PERMITS (C-29-06, C-18-07, C-19-07) AND VARIANCES (V-2-07, V-5-07, V-6-07) TO CHANGE THE LAND USE AND ZONING DESIGNATION FROM SINGLE-FAMILY DETACHED RESIDENTIAL TO COMMERCIAL GENERAL AND TO ALLOW THE CONSTRUCTION OF A MINI MART, CARWASH AND RENOVATION OF AN EXSITING SERVICE STATION LOCATED AT THE SOUTHEAST CORNER OF CAROLYN CIRCLE AND MISSION AVENUE – MOHSEN MISSION AVENUE – APPLICANT: MOHSEN AND SUSANA ARABSHAHI**

RECOMMENDATION

Staff recommends that the Planning Commission by motion:

(1) Adopt the Mitigated Negative Declaration for the Oceanside Beach Restoration, in light of the whole record that the project will not have a significant effect on the environment, and that the Mitigated Negative Declaration reflects the independent judgment of the Planning Commission; and

(2) Adopt Planning Commission No. Resolution 2007-P68 recommending that the City Council approve the requested General Plan Amendment (GPA-4-07) and Zone Amendment (ZA-3-03), Development Plan (D-11-03), three Conditional Use Permits (C-29-06, C-18-07, C-19-07) and three Variances (V-2-07, V-5-07, V-6-06) with findings and conditions of approval attached herein.

PROJECT DESCRIPTION AND BACKGROUND

Site Review: The subject site is currently being used as a service station on .49 acres located on the southeast corner of the intersection of Carolyn Circle and Mission Avenue. An outdated vehicle service garage constructed in 1963 with an attached retail suite currently exists and will be removed as part of this Development Plan.

The surrounding area consists of the San Luis Rey Estates single-family Subdivision to the south and west, industrial and commercial use to the north, a vacant parcel to the east and the La Mission mixed-use development to the northeast of the site.

The site is relatively flat and slopes slightly down in a southeasterly direction with a grade differential of approximately a half a foot between the high and low points of the site.

The underlying land use designation for the site is Single-Family Residential (RS) for the corner lot at the intersection of Carolyn Circle and Mission Avenue and Commercial General (CG) at the east parcel. The property consists of a service station and gasoline-pumps over two separate parcels that consist of a Single-Family (RS) zoning to the west (Parcel146-061-01) and (Parcel 160-270-11) possesses a Commercial General (CG) zoning designation. The larger neighborhood area encompassing the project site is the Airport Neighborhood.

Project Description: The applicant has requested the subject entitlements for a project that includes a General Plan Amendment, Zone Amendment, Development Plan, Conditional Use Permits and Variances. Each discretionary request is described as follows:

General Plan Amendment (GPA-4-07) represents a request for the following:

To change the General Plan designation of the 6,114 Parcel (146-061-01) for conformance with the neighboring property and existing use. The existing General Plan Designation is Single-Family Dwelling-Residential (SFD-R) and is currently a part of the Mohsen service station facility. The land use change will allow the existing use to be in conformance with the Commercial General land use designation. The General Plan Amendment will allow the land use designation to be in conformance with the General Commercial Designation and the existing use.

Zone Amendment (ZA-3-03) represents a request for the following:

A request to allow the zoning designation to change from the Single-Family Residential (RS) to conform to the adjoining parcel Commercial General (CG) designation. The proposed Zoning Amendment will permit existing service station that is divided by the zoning district boundaries to be in conformance with Commercial General (CG) zoning designation and uses.

Development Plan (D-11-03) represents a request for the following:

The applicant is requesting to demolish the existing vehicle service building and attached retail suite and to construct a two-story 2,725-square foot mini-mart with an associated restaurant, second story office, two new gas pump canopies, additional landscaping, a 757-square foot automatic drive-through car wash and an associated 134-square foot equipment room. The development will encompass several improvements to the site such

as additional landscape areas in and around the property, a trash enclosure as designed by the City of Oceanside standards, new exterior pole lighting, relocation of the existing propane tank, a new North County Transit District pedestrian waiting bench and shelter, block walls, new signage, repaving of the site and provision of additional parking stalls. The service pumps have been recently replaced in the past year and will remain and function as a part of this plan.

The proposed mini mart will be situated at the south rear corner of the lot and the drive-through car wash will occupy the southeast corner of the property. Access to the facility will occur at the west and north east portions of the site and all traffic will be one way toward the east portion of the site. The drive-through car wash will maintain the required 5-car stacking as per the requirement of the Oceanside Zoning Ordinance.

The proposed building structure and canopies' architectural design, colors, material and details are intended to complement enhance the property and surrounding neighborhood. The proposed architecture is contemporary and the building materials consist of wood and stucco. The proposed design includes tempered clear glass, masonry pilasters and the stucco wall coverings mixed with the aluminum trip will compliment the building. Exterior colors are French vanilla sierra tan trim details. The applicant has taken into account the residential neighborhood to the south and has provided certain design features such as orientating the lights and activity areas towards the street and not directly facing the neighborhood. Development of the sound walls to mitigate the possible noise that could be produced by the drive-through car wash will be provided for additional noise mitigation. The new structures and improvements will architecturally enhance the property and will compliment the neighborhood.

Staff has analyzed the parking demand based on the operation hours and the peak activity hours per use and found that the parking provided shall meet the needs for the proposed development the project signage will be in conformance with Oceanside Zoning Ordinance regulations and will require approval from the Planning Division.

Conditional Use Permit (C-15-03) represents a request for the following:

The proposed remodel and new construction of the service station constitutes a revision to existing Conditional Use Permit. The property and facility was constructed in 1963 and since then no Conditional Use Permits were filed or required for the use. The service station is currently operating under the classification of a legal non-conforming use or grandfathered use. Since the applicant is requesting a discretionary permits and approvals the property is now subject to a new Conditional Use Permit for the operation and use of a service station.

Conditional Use Permit (C-29-06) represents a request for the following:

To allow the construction and use of two-story 2,725.43-square foot mini-mart with a 831.6-square foot second story office. The sales of merchandise and preparation of food

will occupy the first floor and the second floor will consist of a storage room, office and affiliated restroom. The hours-of-operation and use of the service station will be 24 hours and will be subject to the Conditional Use Permit regulations.

Conditional Use Permit (C-19-07) represents a request for the following:

The construction and use of a 756-square foot automated drive-through car wash and a 134-square foot equipment room. The drive-through will allow the required five vehicle stacking as per the Oceanside Zoning Ordinance.

Variance (V-2-07) represents a request for the following:

The encroachment into the corner side yard and interior setback area with the proposed structures. The required corner side yard setback for the property is 10 feet and the proposed gasoline dispenser canopies will encroach approximately three feet within the required 10-foot corner side yard setback and six feet into the required 15-foot interior yard setback. The proposed mini-mart will also encroach into the required 15-foot rear yard setback with a zero lot line development.

Variance (V-18-07) represents a request for the following:

A 10-foot minimum landscaped setback is required by the Zoning Ordinance along Mission Avenue and Carolyn Circle. At least 50 percent of each required setback area must be landscaped. The project meets the required minimum site landscaping of 10 percent, but does not meet the required 50 percent of landscaping needed for each setback area, due to existing configuration of lot.

Variance (V-19-07) represents a request for the following:

The applicant request to permit seven striped parking stalls that are below the required 15 parking stalls, pursuant to Section 3100.

The applicant is proposing seven striped stalls and 16 parking spaces at the gasoline pumps. The gasoline spaces are not designated striped spaces and the applicant is requesting to take the 16 spaces into account for additional provided parking.

The project is subject to the following Ordinances and City policies:

1. General Plan Land Use Element
2. Zoning Ordinance
3. California Environmental Quality Act (CEQA)

ANALYSIS

KEY PLANNING ISSUES

1. General Plan conformance

The General Plan Land Use Map designation on the subject property is General Commercial (GC). The proposed project is consistent with this designation and the goals and objectives of the City's General Plan as follows:

Land Use Element 2.2 Commercial Development

Section 2.23 General Commercial

Policy A: General Commercial shall provide retail shops, restaurants and services which meet the "immediate" commercial needs of the community. High intensity, drive-up/drive-through and convenience businesses shall be developed in commercial centers of clustered together in coordinated site or development plans to avoid the proliferation of driveway-cuts and to accommodate their high traffic generation characteristics.

Policy B: General Commercial shall be designed on small sited of between five and ten 10 acres. General Commercial areas shall be located on streets designated as major arterials or higher at the intersection of two secondary arterials.

The proposed development and renovations are needed to provide needed amenities to the neighborhood and help foster economic activity to the older under utilized service station. The proposed min-mart and car wash is required to help the business rejuvenate itself and keep up with the changes in the service station industry.

The service station is on a major arterial that is appropriate for General Commercial uses such as the proposed use. The proposed General Plan change will allow the existing service station to operate in conformance with the land use polices of the General Plan. The existing facility currently operates over two separate parcels that posses two separate zoning and land use designations. The proposed General Plan and Land use change will enable the use to operate with a General Commercial land use designation.

Staff has reviewed the development impacts and operational characteristics of the service station and believes that the proposed mini-mart, car wash and renovation of the existing service station will not adversely impact the surrounding land uses.

Goal 1.23: Architecture

Objective: The architectural quality of all proposed projects shall enhance neighborhood and community values and City image.

Policy: B: Structures shall work in harmony with landscaping and adjacent urban and/or topographic form to create an attractive line, dimension, scale, and/or pattern.

The new commercial structures are designed with a modern and visual attractive theme that will compliment the neighborhood. The existing as well as the proposed improvements will be consistent with the development standards of the CG (Commercial General) zone.

Goal 1.22: Landscaping

Objective: The enhancement of community and neighborhood identity through landscaping requirements that frame and soften the built environment consistent with water and energy conservation.

Policy: C. Drought tolerant materials, including native California plant species, shall be encouraged as a landscape type.

The proposed commercial development includes additional landscaping to the site beyond what is existing even though it won't meet the Zoning requirements. The Commercial General district requires a minimum of 10 percent landscaping. The proposed project will meet the minimum requirement, by providing 10.12 percent landscaping. The proposed landscape theme will be consistent to a coastal Mediterranean type and will visually enhance the property.

The landscape theme will provide new landscape islands within the parking lot and surrounding areas, utilizing palm trees, shade trees, a combination of and low massing shrubs such as strelitzia reginae other wise known as "Bird of Paradise," Indian hawthron, new Zealand flax, purple lantana and lily of the nile. The proposed drought tolerant plant palette incorporated into the landscape theme will provide the additional landscaping that is needed and shall enable a physical appearance that shall be encouraged.

2. Zoning Compliance

This project is located in the Commercial General (CG) and Single-Family Residential (RS) District. The proposed Zone Amendment (ZA-3-03) will allow both parcels to exist with a General Commercial Zoning classification to allow the operation and use of a service station, mini-mart and car wash. The Development will meet all the provision of the Zoning Ordinance with the exemptions of the Parking Requirements, Landscaping within setback areas and setbacks.

The following table summarizes proposed and applicable development standards for the Commercial General Districts and the project site:

	ZONING REQUIREMENTS	PROPOSED
MINIMUM LOT SIZE	10,000 square feet	21,739 square feet
OFF-STREET PARKING	15-parking spaces	7-parking spaces
FRONT YARD	15-feet	58-feet
SIDE YARD	0-feet	0-feet
CORNER SIDE YARD	10-feet	7-feet
REAR YARD	15-feet (Adjoining and R District)	6-feet (Canopy) 0-feet (Mini-Mart)
MAXIMUM HEIGHT	50-feet	31-feet
MINIMUM LANDSCAPING	10%	10.12%

The proposed project meets most applicable requirements of the zoning ordiance and the project as proposed is compatible with existing and potential commercial developments on Mission Avenue.

The proposed service station development is required to provide 15 parking stalls as per the zoning ordinance. This will be met with the seven proposed striped parking stalls and the designated 16 spaces at the gasoline pumps. The gasoline pumps are not specified by the Zoning Ordinance as designated parking, but the unique character of the use and the low parking demand service stations warrant this deviation from this code. The proposed one way drive circulation will enable consistent flow throughout the property and will provide the following table that depicts the parking data for the proposed service station and the new improvements based upon Section 3100 of the OZO:

PROPOSED USE	Square footage	Off-Street Parking Requirement	Parking Requirement
Service Station	4232.29 sq. ft.	(1 per 2,500 sq. ft. lot area; plus 1 per 600 sq. ft. of service bay storage area.)	2
Mini-mart	1,893.83	(1 per 200 sq. ft of building area)	9
Second story office	831.6	(1 per 200 sq. ft of building area)	4
Car Wash	891.11	Not Applicable	0
TOTAL			
Total Spaces On-Site (7) All Buildings	Approximately 7,858.54 sq. ft.	Listed above	15

3. Land Use Compatibility with surrounding developments

LOCATION	GENERAL PLAN	ZONING	LAND USE
Subject Property:	CG (Commercial General) & SFD-R (Single Family Dwelling Residential)	CG (Commercial General), RS (Single Family)	Commercial General Service Station
North of Subject Property	CG (Commercial General)	CG (Commercial General)	Z Mart Convenience Store
East of Subject Property:	LI (Light Industrial)	IL (Industrial Light)	Vacant
South of Subject Property:	SFD-R (Single Family Dwelling Residential)	RS (Residential Single Family)	Single Family Residential
West of Subject Property:	SFD-R (Single Family Dwelling Residential)	RS (Residential Single Family)	Single Family Residential

The existing land use of Community Commercial has been determined by staff to be consistent with the General Plan and Zoning Ordinance designations for Community and Neighborhood Commercial areas, in term of lot sizes, architecture, uses and design. The proposed General Plan and Zoning Designation change will allow the property to be in conformance with the commercial development on Mission Avenue and the improvements proposed will not result in any public safety or health issues due to the proximity of the site to residential uses to the south.

DISCUSSION

Issue: The applicant is proposing to remodel an existing service station and construct a

Recommendation: The underlying land use designation and zoning for the subject site – Community Commercial (CG) and Single-Family Residential (RS) – will be subject to the proposed General Plan Amendment and Zone Amendment to permit a Commercial General Designation throughout the entire site. The Commercial General designation is intended to provide opportunities for various types of commercial land uses including drive-through uses. The proposed commercial development requires a Development Plan and a new Conditional Use Permit to allow the construction of the commercial structures and the use of the drive-through car wash. The development of the mini-mart, new gasoline canopies and drive-through car wash meets and exceeds the development standards, with the exception of the proposed landscape medians, parking requirements and front yard and rear yard requirements.

The proposed mini-mart, drive-through car wash and service station uses will serve the needs of the nearby residential uses and vehicles on Mission Avenue. The proposed enhancements to the property will dramatically enhance the property and the neighborhood. The proposed use and improvements will enable commercial activity to continue in that area of the City.
The proposed mini-mart will not physically impact the surrounding neighbors and will be consistent with the similar types of development along Mission Avenue. The proposed mini-mart and car wash will be orientated away from the residential neighborhood and will provide landscaping and sound walls to physically reduce the impact to the residential neighborhood to the south therefore the proposed use will not adversely affect sensitive uses in the immediate area.

Issue: The applicant has requested a variance from the required OZO Section 3019 landscaping to allow the yard areas to be less than 50 percent landscaped.

Recommendation: The proposed project has been designed in compliance with loading and screening development standards and exceeds minimum landscaping requirements, but will not meet the requirement of at least 50 percent of the required setback areas to be landscaped. However, the proposed landscaping will visually enhance the property. The existing lot configuration and proposed structures create a physical hardship to allow the setback areas to be warranted at 50 percent landscaped, making the landscaping Variance warrant for approval.

Issue: The applicant has requested a reduction in the required parking requirements.

Recommendation: A total of 7 parking spaces will be provided on the site, which is under the required 15 striped parking stalls as per the City of Oceanside parking requirement section 3100. The applicant has requested that the 16 spaces allocated for vehicle gasoline service be considered as parking stalls. The traffic analysis determined that the development will generate 580 additional trips to the area which is low for a service station. The existing trips generated by the service station total is 1900 and with the mini-mart, carwash and improvements the trips generated will be 2,480. Staff believes that the additional trips generated will not adversely impact the surrounding neighborhood and will not adversely affect on-site parking. The proposed mini-mart will enable the customers to

quickly purchase products and not require a long time period within the building. Mini-mart type uses usually serve the patron that parked at the gasoline pumps and does not require large amounts of off-street parking.

Issue: The applicant has requested a variance from the required OZO Section 1100 required yard requirements.

Recommendation: The proposed gasoline dispenser canopies encroach approximately three feet within the 10-foot building setback area along Mission Avenue and six feet into the 15-foot interior side yard setback area. Two feet of encroachment is allowed as per the City of Oceanside zoning Ordinance. The proposed mini-mart building abutting the rear property line and the residential district is required a 15-foot setback as specified by the General Commercial district and due to the particular lot constraints and surrounding uses, staff has found the Variance is warranted. The canopy encroachment will not adversely impact the surrounding neighbors or tenants in the neighborhood and will physically enhance the property. The mini mart will be designed to be orientated away from the residential district, by not providing rear windows and bright lighting. Staff believes that granting the Variance will allow the proposed development and will ensure that the public health, safety and welfare of the site are maximized.

ENVIRONMENTAL DETERMINATION

The proposed project has been reviewed pursuant to the California Environmental Quality Act (CEQA) and an Initial Study and Mitigated Negative Declaration was prepared. The mitigation measures have analyzed that the noise will be mitigated by sound walls operation hours. The environmental analysis concluded that the project will not have significant effect on the environment.

PUBLIC NOTIFICATION

Legal notice was published in the North County Times and notices were sent to property owners of record within a 1500-foot radius of the subject property, individuals and or organizations requesting notification, applicant and other interested parties. As of December 17, 2007, no communication supporting or opposing the request has been received.

SUMMARY

The proposed project is in compliance with the goals objectives and polices set forth by the General Plan and the Local Coastal Program. The project will replenish a portion of the beaches and will benefit the public, health, safety and welfare of the City of Oceanside. The Commission's action should be:

-- Adopt the Mitigate Negative Declaration for the Mohsen Service Station, in light of the whole record that the project will not have a significant effect on the environment, and that the Mitigated Negative Declaration reflects the independent judgment of the Planning Commission; and

-- Move to approve General Plan Amendment (GPA-4-07), Zone Amendment (ZA-3-03), Development Plan (D-11-03), Conditional Use Permits (C-29-06, C-18-07, C-10-07) and Variances (V-2-07, V-18-07, V-19-07) and adopt Planning Commission Resolution No. 2007-P68 as attached.

PREPARED BY:

Scott Nightingale
Planner II
JH/SN/fil

SUBMITTED BY:

Jerry Hittleman
City Planner

Attachments:
1. Plans
2. Planning Commission Resolution No. 2007-P68
3. Mitigated Negative Declaration

ORIGINAL

DATE POSTED: 11/15/2007
REMOVE POST: 12/5/2007
[X] 20 days; or,
[ ] 30 day for SCH review

MITIGATED NEGATIVE DECLARATION

city of oceanside, california

ATTACHMENT 6

1. **APPLICANT:** Susan and Mohsen Arabshahi
2. **ADDRESS:** 3213 Mission Avenue
3. **PHONE NUMBER:** 760-945-7222
4. **LEAD AGENCY:** City of Oceanside, 300 N. Coast Hwy., 92054
5. **PROJECT MGR.:** Jerry Hittleman, City Planner
6. **PROJECT TITLE:** Mohsen's Gas Station, Car Wash and Convenience Store
7. **DESCRIPTION:** The proposed project is a General Plan Amendment and Zone Change to bring the entire site into the General Commercial General Plan and Zoning designations and to construct a car wash and convenience store on the site.

CITY PLANNER DETERMINATION: This project has been evaluated by the City Planner of the City of Oceanside in accordance with the Section 21080(c) of the California Environmental Quality Act (CEQA). On <date>, 200x, the City Planner determined that this project will not have a potentially significant adverse effect on the environment and issued a Mitigated Negative Declaration (MND). The basis for the City Planner's determination is the Initial Study prepared pursuant to Section 15063 of the California Environmental Quality Act (CEQA) Guidelines. Copies may be reviewed or obtained from the Planning Division in City Hall located at 300 N. Coast Hwy. South Building. All public comments on the negative declaration must be provided in writing to the Planning Division on or before the "Posting Removal Date" cited above.

Jerry Hittleman, Acting City Planner

cc: County Clerk
Project file (project manager)
CEQA file
Project Applicant
Posting: [X] Civic Center; [X] Public Library;

FILED
Gregory J. Smith, Recorder/County Clerk
NOV 14 2007
A. Consul
BY _____ DEPUTY

RECEIVED
JAN - 4 2008
Planning Department

FILED IN THE OFFICE OF THE
San Diego County
Posted DEC 14 2007
Fax sent to agency DEC 14 2007
Deputy A. Consul

NOTICE OF INTENT TO ADOPT A MITGATED NEGATIVE DECLARATION
city of oceanside

Subject: Mohsen's Gas Station Renovation, GPA-04-07, ZA-03-03, D-11-03, C-15-03, C-19-03, C-18-07, C-29-07, V-05-07, V-06-07; applications for the development of gas station, car wash and convenience store located at the southease corner of Mission Avenue and Carolyn Circle at 3213 Mission Avenue.

NOTICE IS HEREBY GIVEN that the City of Oceanside has prepared and intends to adopt a Mitigated Negative Declaration in connection with the subject project. The Negative Declaration identifies potential effects with respect to water quality and noise. The Mitigated Negative Declaration also includes proposed mitigation measures that will ensure that the proposed project will not result in any significant, adverse effects on the environment. The City's decision to prepare a Negative Declaration should not be construed as a recommendation of either approval or denial of this project.

PROJECT DESCRIPTION: The proposed project is a General Plan Amendment and Zone Change to bring the entire site into the General Commercial General Plan and Zoning designations and to construct a car wash and convenience store on the site.

PUBLIC REVIEW PERIOD: the public review period is from **Friday, November 16, 2007 to Wednesday, December 5, 2007**.

PROJECT MANAGER: Jerry Hittleman, City Planner; (760) 435-3535; e-mail: jhittleman@ci.oceanside.ca.us; Fax number: (760) 754-2958; mailing address: Planning Division, 300 N. Coast Hwy., Oceanside, CA 92054.

NOTICE IS FURTHER GIVEN that the City invites members of the general public to review and comment on this environmental documentation. Written comments may be mailed, e-mailed, or faxed to the project manager. Copies of the Negative Declaration and supporting documents are available for public review and inspection at the Planning Division located in City Hall at, 300 N. Coast Hwy., Oceanside, CA 92054. The City's Planning Commission and City Council will conduct public hearings at future dates to be determined. You will receive a separate public notice for those hearings. If you challenge this project in court, you may be limited to raising only those issues you or someone else raised during the public review period on the proposed Mitigated Negative Declaration (MND) or at the future public hearings.

By order of Jerry Hittleman, City Planner

INITIAL STUDY
city of oceanside california

1. **PROJECT:** Mohsen's gasoline station, car wash and convenience market (GPA-04-07. ZA-03-03, D-11-03, C-15-03. C-19-03, C-18-07, C-29-07V-02-07, V-05-07, V-06-7

2. **LEAD AGENCY:** City of Oceanside

3. **CONTACT PERSON & PHONE:** Jerry Hittleman 760-435-3520

4. **PROJECT LOCATION:** 3213 Mission Avenue

5. **APPLICANT:** Susan and Mohsen Arabshahi, 3213 Mission Avenue, Oceanside, CA, 760-945-7222 (fax) 760-945-7270

6. **GENERAL PLAN DESIGNATION:** Existing: Light Industrial and Single Family Residential. Proposed: General Commercial

7. **ZONING:** Existing CL (Limited Commercial). Proposed CG (General Commercial

8. **PROJECT DESCRIPTION:** The demolition and replacement of the structures at an existing gasoline station located at 3213 Mission Avenue. The project will demolish the existing service station structure (which includes the office) and replace it with a new service canopy and a new office building incorporating a convenience store. A drive-through car wash is also proposed. Twenty-four hour a day operation is proposed. New landscaping and traffic circulation are also planned for the site. To implement these goals the following actions are required by the City of Oceanside:

   General Plan Amendment to place the General Commercial Designation over the entire site to clean up the designation so that the existing land use and the general plan are in conformity. The site is now partially shown on the General Plan Land Use Element for Single Family Residential Use and partially as Light Industrial.

   A matching Zone Change A to General Commercial. . The change will bring the site into conformity with its use and with the General Plan and reflect the existing use as a gasoline station.

   A Development Plan and Conditional Use Permits for the new site design and building, the convenience market and the car wash. The Conditional Use Permits are those required by the zoning ordinance for the gasoline service station, the convenience market and the car wash.

   Variances for the number of parking spaces for a mixed use project, landscaping percentages and widths and setbacks of canopies and buildings from residential development. The number of parking spaces is less than the number cumulatively required by the zoning ordinance. The landscaping varies from the standards for percentages in the yards and for widths of planter areas.

9. **SURROUNDING LAND USE(S) & PROJECT SETTING:** The site is adjacent to residential development (two homes) along its southerly edge and behind and west of the convenience store. The remainder of land surrounding it is shown on the General Plan and Zoning Map for light industrial development Across Mission Avenue are Commercial properties and an apartment project under construction.

10. **OTHER REQUIRED AGENCY APPROVALS:** None

11. PREVIOUS ENVIRONMENTAL DOCUMENTATION: None

12. CONSULTATION:

Noise Study, dated March 2007, conducted by
Medlin and Associates, Acoustical Consultants, PO Box 130941 Carlsbad, CA 760-9330-6515

Traffic Study, dated October 2005, conducted by
Katz, Okitsu & Associates
2251 San Diego Avenue, Suite A-270
San Diego, California 92110
(619) 683-2933 Fax (619) 683-7982

Second Quarter 2007 Ground Water Monitoring Report prepared by Rubicon Engineering Corporation
16 Technology Drive, Suite 138, Irvine, CA 92618

Corrective Action Plan prepared April 27, 2004, for Site Assessment and Mitigation Division of the County of San Diego Department of Environmental Health Services by
D-Max Engineering, Inc.
8380 Miramar Mall, Suite 227
San Diego, CA 92121
(858) 455-9988 Fax: (858) 455-9978

Geotechnical Study
Prepared by Kleifnelder, Inc.
March 31, 2004

13. SUMMARY OF ENVIRONMENTAL FACTORS POTENTIALLY AFFECTED: The project would not affect any environmental factors resulting in a APotentially Significant Impact.. A summary of the environmental factors potentially affected by this project, consisting of the following APotentially Significant Impact Unless Mitigated≅, include:

☐ Aesthetics	☐ Agricultural	☐ Air Quality
☐ Biological Resources	☐ Cultural Resources	☐ Geological
☐ Hazards	☒ Water	☐ Land Use & Planning
☐ Mineral Resources	☒ Noise	☐ Population & Housing
☐ Public Services	☐ Recreation	☐ Transportation
☐ Utilities Systems		

14. ENVIRONMENTAL CHECKLIST

This section analyzes the potential environmental impacts which may result from the proposed project. For the evaluation of potential impacts, the questions in the Initial Study Checklist (Section 2) are stated and answers are provided according to the analysis undertaken as part of the Initial Study. The analysis considers the project's short-term impacts (construction-related), and its operational or day-to-day impacts. For each question, there are four possible responses. They include:

1. *No Impact*. Future development arising from the project's implementation will not have any measurable environmental impact on the environment and no additional analysis is required.

2. *Less Than Significant Impact*. The development associated with project implementation will have the potential to impact the environment; these impacts, however, will be less than the levels or thresholds that are considered significant and no additional analysis is required.

3. *Potentially Significant Unless Mitigated*. The development will have the potential to generate impacts which may be considered as a significant effect on the environment, although mitigation measures or changes to the project's physical or operational characteristics can reduce these impacts to levels that are less than significant.

4. *Potentially Significant Impact*. Future implementation will have impacts that are considered significant, and additional analysis is required to identify mitigation measures that could reduce these impacts to less than significant levels.

	Potentially Significant	Potentially Significant Unless Mit.	Less than Significant	No Impact
14.1 AESTHETICS. Would the project:				
a. Have a substantial adverse effect on a scenic vista?	☐	☐	☐	☒
b. Substantially damage scenic resources, including, but not limited to trees, rock outcroppings, and historic building along a State-designated scenic highway?	☐	☐	☐	☒
c. Substantially degrade the existing visual character or quality of the site and its surroundings?	☐	☐	☐	☒
d. Create a new source of substantial light or glare which would adversely affect day or nighttime views in the area?	☐	☐	☐	☒

a) *Have a substantial adverse effect on a scenic vista?* ***No Impact.*** Short-term construction-related aesthetic impacts would consist primarily of grading activities, the presence of construction equipment, and additional signage and warning markers on roadways. No valuable aesthetic resources would be destroyed as a result of construction-related activities. These short-term impacts are temporary and would cease upon project completion.

Physical design attributes of the project will minimize aesthetic impacts. These design attributes include the replacement of an old, deteriorated structure with a new building, new landscaping and new dispensing facilities. Additionally, the incorporation of new landscaping would substantially minimize visual impacts to surrounding areas. Landscape screening for this site has been designed to echo and blend with new La Mision project across the street and the median on Mission Avenue.

The proposed project design features with a new building, all new structures, signs and landscaping would result in the project having no significant aesthetic impacts.

b) *Substantially damage scenic resources, including, but not limited to, trees, rock outcroppings, and historic buildings within a state scenic highway?* ***No Impact.*** No scenic resources, including trees, rock outcroppings or historic buildings are situated on-site. In addition, the project site is not situated within a state scenic highway. Impacts are not anticipated in this regard.

c) *Substantially degrade the existing visual character or quality of the site and its surroundings?* ***No Impact.*** The deteriorating exiting structure will be replaced by new buildings and landscaping will be added.

d) *Create a new source of substantial light or glare which would adversely affect day or nighttime views in the area?* ***No Impact.*** The proposed project would create no new significant source of lighting. The Oceanside Zoning Ordinance requires that all lighting use shielded luminaries with glare control to prevent light spillover onto adjacent areas. The project would have no impact.

	Potentially Significant Impact	Potentially Significant Unless Mit.	Less than Significant Impact	No Impact
14.2 AGRICULTURAL RESOURCES. Would the project:				
a. Convert Prime Farmland, Unique Farmland, Farmland of Statewide Importance as depicted on maps prepared pursuant to the Farmland Mapping and Monitoring Program of the CA. Resources Agency?	☐	☐	☐	☒
b. Conflict with existing zoning for agricultural use, or a Williamson Act Contract?	☐	☐	☐	☒
c. Involve other changes in the existing environment which, due to their location or nature, could result in conversion of Farmland, to non-agricultural use?	☐	☐	☐	☒

a) *Convert Prime Farmland, Unique Farmland, or Farmland of Statewide Importance (Farmland), as shown on the maps prepared pursuant to the Farmland Mapping and Monitoring Program of the California Resources Agency, to non-agricultural use?* ***No Impact.*** Designated land uses within the project area do not include agricultural uses and project implementation would not result in conversion of existing farmland to non-agricultural uses.

b) *Conflict with existing zoning for agricultural use, or a Williamson Act contract?* ***No Impact.*** The proposed project is located in an area zoned for residential, commercial and industrial uses, agricultural designations do not occur within the project area and no Williamson Act contracts apply.

c) *Involve other changes in the existing environment which, due to their location or nature, could result in conversion of Farmland, to non-agricultural use?* ***No Impact.*** As previously stated, the proposed project area is not located within an agricultural area. Thus, implementation of this project would not result in changes in the environment, which would result in the conversion of farmland to non-agricultural use. No impacts are anticipated in this regard.

	Potentially Significant Impact	Potentially Significant Unless Mit.	Less than Significant Impact	No Impact
14.3 AIR QUALITY. Would the project:				
a. Conflict with or obstruct implementation of the applicable air quality plan?	☐	☐	☐	☒
b. Violate an air quality standard or contribute to an existing or projected air quality violation?	☐	☐	☐	☒

	Potentially Significant Impact	Potentially Significant Unless Mit.	Less than Significant Impact	No Impact
c. Result in a cumulatively considerable net increase of any criteria pollutant for which the project region is non-attainment under the applicable federal or state ambient air quality standard (including releasing emissions which exceed quantitative thresholds for ozone precursors)?	☐	☐	☐	☒
d. Expose sensitive receptors to substantial pollutant concentrations?	☐	☐	☒	☐
e. Create objectionable odors affecting a substantial number of people?	☐	☐	☐	☒

a) *Conflict with or obstruct implementation of the applicable air quality plan?* ***No Impact.*** The project site is located within the San Diego Air Basin (SDAB), which is governed by the San Diego Air Pollution Control Board (SDAPCD). The General Plan Amendment being considered at this time is a "clean up" amendment to apply consistency to the existing Commercial land use on the property which has been used as a gasoline station for many years, but to which the General Plan Designation was never applied.

Only new or amended General Plan elements, Specific Plans and significantly unique projects need to go under a consistency review due to the RAQS being based on projections from local General Plans. Therefore, projects that are consistent with the local General Plan and do not create significant air quality impacts are considered consistent with the air quality-related regional plan. Because the proposed Project is consistent with the goals of the City of Oceanside General Plan, and would not produce long-term significant quantities of criteria pollutants or violate ambient air quality standards, the proposed Project is considered to be consistent with the RAQS and a more detailed consistency analysis is not warranted.

b) *Violate any air quality standard or contribute substantially to an existing or projected air quality violation?* ***No Impact.***. Two different screening significance thresholds are provided and include: 1) Construction thresholds; and 2) operation thresholds.

CONSTRUCTION EMISSIONS

Short-term minor impacts associated with the demolition and construction phases may result in local nuisances associated with increased dust/particulate levels. Construction activities would result in criteria pollutant emissions from stationary and mobile equipment, including material delivery trucks and worker vehicles to and from the project site. This would be a temporary construction impact, which would exist on a short-term basis during construction and would cease upon completion of construction. Adherence to standard City of Oceanside dust control procedures would reduce potential construction-related air quality standards or contribute to an existing air quality violation in the air basin as only minor amounts of earth movement is proposed. However, in order to further reduce construction equipment operational emissions, all vehicles and construction equipment would be required to be equipped with state-mandated emission control devices. Therefore, project implementation would not result in locally elevated levels of regulated air emissions in close proximity to sensitive receptors.

LONG-TERM OPERATIONAL EMISSIONS

Long-term air quality impacts consist of mobile source emissions generated from project-related traffic and stationary source emissions (generated directly from on-site activities and from the electricity and natural gas consumed. Therefore, long-term emissions are not anticipated. Due to the nature of the project, project-generated emissions from both construction activities and operations would not result in significant air quality impacts on a local or regional basis since State or Federal air quality thresholds or standards would not be exceeded.

c) *Result in a cumulatively considerable net increase of any criteria pollutant for which the project region is non-attainment under an applicable federal or state ambient air quality standard (including releasing emissions which exceed quantitative thresholds for ozone precursors)?* ***No Impact.***). The General Plan Amendment being considered at this time is a "clean up" amendment to apply consistency to the existing Commercial land use on the property which has been used as a gasoline station for many years, but to which the General Plan Designation was never applied.

d) *Expose sensitive receptors to substantial pollutant concentrations?* ***Less than Significant Impact.*** Sensitive populations (i.e., children, senior citizens and acutely or chronically ill people) are more susceptible to the effects of air pollution than are the general population. Land uses considered sensitive receptors typically include residences, schools, playgrounds, childcare centers, hospitals, convalescent homes, and retirement homes. There are no sensitive receptors in proximity to the project site. Although construction and operation of the project would result in a small increase vehicle trips on area roadways over present levels and result in associated air pollutants, these increases would not significantly contribute to pollution levels.

e) *Create objectionable odors affecting a substantial number of people?* ***No Impact.*** The proposed project would not create objectionable odors affecting a substantial number of people.

	Potentially Significant Impact	Potentially Significant Unless Mit.	Less than Significant Impact	No Impact
14.4 BIOLOGICAL RESOURCES. Would the project:				
a. Have a substantial adverse effect, either directly or through habitat modifications, on any species identified as a candidate, sensitive, or special status species in local or regional plans, policies, or regulations, or by the California Department of Fish and Game or the USFWS?	☐	☐	☐	☒
b. Have a substantial adverse effect on any riparian habitat or other sensitive natural community identified in local or regional plans, policies, regulations or by the California Department of Fish and Game (DFG) or U.S. Fish and Wildlife Service?	☐	☐	☒	☐
c. Have a substantial adverse effect on federally protected wetlands as defined by Section 404 of the Clean Water Act (including, but not limited to, marsh, vernal pool, coastal, etc.) through direct removal, filling, hydrological interruption, or other means?	☐	☐	☐	☒
d. Interfere substantially with the movement of any native resident or migratory fish or wildlife species or with established native resident or migratory wildlife corridors, or impede the use of native wildlife nursery sites?	☐	☐	☐	☒
e. Conflict with any local policies or ordinances protecting biological resources, such as tree preservation policy/ordinance?	☐	☐	☐	☒
f. Conflict with the provisions of an adopted Habitat Conservation Plan, Natural Community Conservation Plan, or other approved local, regional, or state habitat conservation plan?	☐	☐	☐	☒

a. *Have a substantial adverse effect, either directly or through habitat modifications, on any species identified as a candidate, sensitive, or special status species in local or regional plans, policies, or regulations, or by the California Department of Fish and Game or the USFWS?* ***No Impact.*** The

area has been graded for years and the surrounding industrially zoned property has been cleared and plowed for weed control. Therefore, the proposed project would not have an adverse effect, either directly or through habitat modifications, on any species identified as a candidate, sensitive, or special status species in local or regional plans, policies, or regulations, or by the California Department of Fish and Game or U.S. Fish and Wildlife Service.

b. *Have a substantial adverse effect on any riparian habitat or other sensitive natural community identified in local or regional plans, policies, regulations or by the California Department of Fish and Game (DFG) or U.S. Fish and Wildlife Service?* ***Less Than Significant Impact.***. The proposed project would have no substantial adverse effect on any riparian habitat or other sensitive natural community identified in local or regional plans, policies, regulations or by the California Department of Fish and Game or U.S. Fish and Wild Service. The project site is void of riparian corridors and sensitive habitat. It is within a wildlife corridor study area, but no habitats exist close to the site. Thus, no significant impacts to riparian habitat or sensitive natural communities are anticipated.

c. *Have a substantial adverse effect on federally protected wetlands as defined by Section 404 of the Clean Water Act (including, but not limited to, marsh, vernal pool, coastal, etc.) through direct removal, filling, hydrological interruption, or other means?* ***No Impact.*** No wetlands, as defined by Section 404 of the Clean Water Act, exist or have been identified on-site or immediately adjoining the site. Thus, the project would not result in impacts to wetlands.

e.. *Interfere substantially with the movement of any native resident or migratory fish or wildlife species or with established native resident or migratory wildlife corridors, or impede the use of native wildlife nursery sites?* ***No Impact.*** Project implementation would not interfere with the movement of any native resident or migratory fish or wildlife species, with established native resident or migratory wildlife corridors, or impede the use of native wildlife nursery sites, as none exist within the project area.

f. *Conflict with any local policies or ordinances protecting biological resources, such as tree preservation policy/ordinance?* ***No Impact.*** The project site is surrounded by developed commercial, industrial, suburban or urban land uses and ornamental vegetation. There is no vegetation on the site to be removed during construction. New trees will be planted to conform to the requirements of the area.

	Potentially Significant Impact	Potentially Significant Unless Mit.	Less than Significant Impact	No Impact
14.5 CULTURAL RESOURCES. Would the project:				
a. Cause a substantial adverse change in the significance of a historical resource as defined in ∋ 15064.5 of CEQA?	☐	☐	☐	☒
b. Cause a substantial adverse change in the significance of an archaeological resource pursuant to ∋ 15064.5 of CEQA?	☐	☐	☐	☒
c. Directly or indirectly destroy a unique paleontological resource or site or unique geologic feature?	☐	☐	☐	☒
d. Disturb any human remains, including those interred outside of formal cemeteries?	☐	☐	☐	☒

a. *Cause a substantial adverse change in the significance of a historical resource as defined in ∋ 15064.5 of CEQA?* ***No Impact.*** The existing project area has been completely disturbed. Based on Appendix G of

the State CEQA Guidelines, and the policies and regulations of the City of Oceanside, the project site and surrounding area are not designated as archaeological or historically sensitive areas.

b. *Cause a substantial adverse change in the significance of an archaeological resource pursuant to ə 15064.5 of CEQA?* ***No Impact.*** Refer to Response to a. above.

c. *Directly or indirectly destroy a unique paleontological resource or site or unique geologic feature?* ***No Impact***. Due to the project site's location and the extensive disturbance which has occurred on the property, there is no potential for sub-surface resources.

d. *Disturb any human remains, including those interred outside of formal cemeteries?* ***No Impact.*** There are no known grave sites within the project limits.

	Potentially Significant Impact	Potentially Significant Unless Mit.	Less than Significant Impact	No Impact
14.6 GEOLOGY AND SOILS. Would the project:				
a. Expose people or structures to potential substantial adverse effects, including the risk of loss, injury, or death involving (i.) rupture of a known earthquake fault, as delineated on the most recent Alquist-Priolo Earthquake Fault Zoning Map issued by the State Geologist, or based on other substantial evidence of a known fault (Refer to DM&G Pub. 42)?; or, (ii) strong seismic ground shaking?; or, (iii) seismic-related ground failure, including liquefaction?; or, (iv) landslides?	☐	☐	☐	☒
b. Result in substantial soil erosion or the loss of topsoil?	☐	☐	☐	☒
c. Be located on a geologic unit or soil that is unstable, or that would become unstable as a result of the project, and potentially result in on-site or off-site landslide, lateral spreading, subsidence, liquefaction or collapse?	☐	☐	☐	☒
d. Be located on expansive soil, as defined in Table 18- 1-B of the 1994 UBC, creating substantial risks to life or property?	☐	☐	☐	☒
e. Have soils incapable of adequately supporting the use of septic tanks or alternative waste water disposal systems where sewers are not available for the disposal of waste water?	☐	☐	☐	☒

a) *Expose people or structures to potential substantial adverse effects, including the risk of loss, injury, or death involving:*

1) *Rupture of a known earthquake fault, as delineated on the most recent Alquist-Priolo Earthquake Fault Zoning Map issued by the State Geologist for the area or based on other substantial evidence of a known fault? Refer to Division of Mines and Geology Special Publication 42.* ***Less Than Significant Impact.*** The project site is located within the seismically active southern California region and would likely be subjected to groundshaking, thus exposing proposed water transmission and storage facilities to seismic hazards. No known active seismic faults traverse the City of Oceanside. Impacts are not anticipated to be significant.

2) *Strong seismic ground shaking?* ***Less Than Significant Impact.*** Southern California is a seismically active region likely to experience, on average, one earthquake of Magnitude 7.0, and ten (10)

earthquakes of Magnitude 6.0 over a period of 10 years. No known active seismic faults traverse the City of Oceanside. Impacts are not anticipated to be significant.

Conformance with the requirements of the approved Geotechnical Report and standard engineering practices and design criteria would reduce the effects of seismic groundshaking to less than significant levels.

3) *Seismic-related ground failure, including liquefaction?* ***Less Than Significant Impact.*** Liquefaction is the loss of strength of cohesionless soils when the pore water pressure in the soil becomes equal to the confining pressure. Liquefaction generally occurs as a "quicksand" type of ground failure caused by strong groundshaking. The primary factors influencing liquefaction potential include groundwater, soil type, relative density of the sandy soils, confining pressure, and the intensity and duration of groundshaking. A Geotechnical Report was prepared in 2004 by Kleinfelder, Inc. (attached). Its recommendations for dealing with the subject of liquefaction. The implementation of its requirements is part of the City's review and approval process.

4) *Landslides?* ***Less Than Significant Impact.*** Landslides are mass movements of the ground that include rock falls, relatively shallow slumping and sliding of soil, and deeper rotational or transitional movement of soil or rock. However, according to the *City of Oceanside General Plan*, the project site is not located within a known or highly suspected landslide area. Further, site stabilization and soil compaction requirements required by project geotechnical investigation and design parameters established by the most recent UBC and the City's Seismic Hazard Mitigation Ordinance would reduce any potential impacts to less than significant levels.

b) *Result in substantial soil erosion or the loss of topsoil?* **No Impact.** Grading and trenching during the construction phase of the project would displace soils and temporarily increase the potential for soils to be subject to wind and water erosion. The contractor will be required to comply with standard engineering practices for erosion control and a qualified soils engineer will monitor soil compaction during construction.

c) *Be located on a geologic unit or soil that is unstable, or that would become unstable as a result of the project, and potentially result in on- or off-site landslide, lateral spreading, subsidence, liquefaction or collapse?* ***Less Than Significant Impact.*** No water extractions or similar practices are anticipated to be necessary that are typically associated with project-related subsidence effects. In addition, surface material which would be disrupted/displaced would be balanced and re-compacted on-site during project construction. Adherence to standard engineering practices would result in less than significant impacts related to subsidence of the land. The Geotechnical Report prepared by Kleinfelder, Inc., and mentioned above addresses the techniques necessary for this issue.

d) *Be located on expansive soil, as defined in Table 18-1-B of the Uniform Building Code (1997), creating substantial risks to life or property?* ***Less Than Significant Impact.*** The dominant soil in the project area are quaternary alluvial materials characterized as sand silt and alluvial deposits. Further, adherence to standard engineering practices contained within the most recent UBC will reduce any potential impacts to less than significant levels.

d) *Have soils incapable of adequately supporting the use of septic tanks or alternative wastewater disposal systems where sewers are not available for the disposal of wastewater?* ***No Impact.*** The proposed project does not include the implementation of septic tanks or alternative wastewater disposal systems.

	Potentially Significant Impact	Potentially Significant Unless Mit.	Less than Significant Impact	No Impact
14.7 HAZARDS AND HAZARDOUS MATERIALS. Would the project:				
a. Create a significant hazard to the public or the environment through the routine transport, use, or disposal of hazardous materials?	☐	☐	☒	☐
b. Create a significant hazard to the public or the environment through reasonably foreseeable conditions involving the release of hazardous materials into the environment?	☐	☐	☒	☐
c. Emit hazardous emissions or handle hazardous or acutely hazardous materials, substances, or waste within one-quarter mile of an existing or proposed school?	☐	☐	☒	☐
d. Be located on a site which is included on a list of hazardous materials sites compiled pursuant to Government Code Section 65962.5 and, as a result, would it create a significant hazard to the public or the environment?	☐	☐	☒	☐
e. For a project located within an airport land use plan or, where such a plan has not been adopted, within two miles of a public airport or public use airport, would the project result in safety hazard for people residing or working in the project area?	☐	☐	☐	☒
f. For a project within the vicinity of a private airstrip, would the project result in a safety hazard for people residing or working in the project area?	☐	☐	☐	☒
g. Impair implementation of or physically interfere with an adopted emergency response plan or emergency evacuation plan?	☐	☐	☐	☒
h. Expose people or structures to a significant risk of loss, injury or death involving wildland fires, including where wildlands are adjacent to urbanized areas or where residences are intermixed with wildlands?	☐	☐	☐	☒

a) *Create a significant hazard to the public or the environment through the routine transport, use, or disposal of hazardous materials?* ***Less Than Significant Impact.*** The proposed project would not involve the routine transport, use, or disposal of hazardous materials, and would not result in such impact. The project's operations are regulated by the State of California and the Federal Agencies and will follow all of the regulations, therefore there will be a less than significant impact.

b) *Create a significant hazard to the public or the environment through reasonably foreseeable upset and accident conditions involving the release of hazardous materials into the environment?* ***Less Than Significant Impact..*** The proposed project is not anticipated to result in a release of hazardous materials into the environment. However, during the short-term period of project construction, there is the possibility of accidental release of hazardous substances such as spilling of hydraulic fluid or diesel fuel associated with construction equipment maintenance. The project will conform to the rules relating to grading and construction found in the geotechnical report on file with the City. The level of risk associated with the accidental release of these hazardous substances is not considered significant due to the small volume and low concentration of hazardous materials. The contractor will be required to use standard construction controls and safety procedures which are required by the City which would avoid and minimize the potential for accidental release of such substances into the environment. The site's ground water quality is being constantly monitored for changes and is showing to be improving. See the Second Quarter 2007 report attached (prepared by Rubicon Engineering Corporation).

c) *Emit hazardous emissions or handle hazardous or acutely hazardous materials, substances, or waste within one-quarter mile of an existing or proposed school?* ***Less Than Significant Impact.*** No existing or proposed school facilities are located within a one-quarter mile radius of the project site.

d) *Be located on a site which is included on a list of hazardous materials sites compiled pursuant to Government Code Section 65962.5 and, as a result, would it create a significant hazard to the public or the environment?* ***Less Than Significant Impact.*** According to the California Environmental Protection Agency's "Cortese List" the proposed project site is not included on a list of sites containing hazardous waste or affecting public drinking water. The site is being monitored under the direction of the County of San Diego Department of Environmental Health Services by D-Max engineering and a diminution of contaminates has been documented.

e) *For a project located within an airport land use plan or, where such a plan has not been adopted, within two miles of a public airport or public use airport, would the project result in a safety hazard for people residing or working in the project area?* ***No Impact.*** The proposed project site is not located within an airport land use plan but is within two miles of a public airport. As it is rehabilitation and remodeling of an existing use it and would not result in a safety hazard for people residing or working in the project area.

f) *For a project within the vicinity of a private airstrip, would the project result in a safety hazard for people residing or working in the project area?* ***No Impact.*** The proposed project site is not located within the vicinity of a private airstrip and would not result in a safety hazard for people residing or working in the project area.

g) *Impair implementation of or physically interfere with an adopted emergency response plan or emergency evacuation plan?* ***No Impact.*** The proposed project would have no impacts on emergency response plans or emergency evacuation plans. No revisions to adopted emergency plans would be would be required as a result of the proposed project.

h) *Expose people or structures to a significant risk of loss, injury or death involving wildland fires, including where wildlands are adjacent to urbanized areas or where residences are intermixed with wildlands?* ***No Impact.*** The project would not expose people or structures to a significant risk of wildland fires because the project site does not adjoin OFD-designated wildland areas.

	Potentially Significant Impact	Potentially Significant Unless Mit.	Less than Significant Impact	No Impact
14.8 HYDROLOGY AND WATER QUALITY. Would the project:				
a. Violate any water quality standards or waste discharge requirements?	☐	☐	☒	☐
b. Substantially deplete groundwater supplies or interfere substantially with groundwater recharge such that there would be a net deficit in aquifer volume or a lowering of the local groundwater table level (e.g., the production rate of pre-existing nearby wells would drop to a level which would not support existing land uses or planned uses for which permits have been granted)?	☐	☐	☒	☐
c. Substantially alter the existing drainage pattern of the site or area including through the alteration of the course of a stream or river, in a manner which would result in substantial erosion or siltation on- or off-site?	☐	☐	☐	☒

	Potentially Significant Impact	Potentially Significant Unless Mit.	Less than Significant Impact	No Impact
d. Substantially alter the existing drainage pattern of the site or area, including through the alteration of the course of a stream or river, or substantially increase the rate or amount of surface runoff in a manner which would result in flooding on or off site?	☐	☐	☐	☒
e. Create or contribute runoff water which would exceed the capacity of existing or planned stormwater drainage systems or provide substantial additional sources of polluted runoff?	☐	☐	☐	☒
f. Otherwise substantially degrade water quality?	☐	☐	☒	☐
g. Place housing within a 100-year flood hazard area as mapped on a Federal Flood Hazard Boundary or Flood Insurance Rate map or other flood hazard delineation map?	☐	☐	☐	☒
h. Place within a 100-year flood hazard area structures which would impede or redirect flood flows?	☐	☐	☐	☒
i. Expose people or structures to a significant risk of loss, injury or death involving flooding, including flooding as a result of the failure of a levee or dam?	☐	☐	☐	☒
j. Inundation by seiche, tsunami, or mudflow?	☐	☐	☐	☒
k. Result in an increase in pollutant discharges to receiving waters considering water quality parameters such as temperature, dissolved oxygen, turbidity and other typical stormwater pollutants (e.g. heavy metals, pathogens, petroleum derivatives, synthetic organics, sediment, nutrients, oxygen-demanding substances, and trash)?	☐	☒	☐	☐
l. Result in significant alternation of receiving water quality during or following construction?	☐	☐	☒	☐
m. Could the proposed project result in increased erosion downstream?	☐	☐	☒	☐
n. Result in increased impervious surfaces and associated increased runoff?	☐	☐	☒	☐
o. Create a significant adverse environmental impact to drainage patterns due to changes in runoff flow rates or volumes?	☐	☐	☒	☐
p. Tributary to an already impaired water body, as listed on the Clean Water Act Section 303(d) list? If so, can it result in an increase in any pollutant for which the water body is already impaired?	☐	☐	☒	☐
q. Tributary to other environmentally sensitive areas? If so, can it exacerbate already existing sensitive conditions?	☐	☐	☒	☐
r. Have a potentially significant environmental impact on surface water quality to either marine, fresh, or wetland waters?	☐	☐	☒	☐
s. Have a potentially significant adverse impact on groundwater quality?	☐	☐	☒	☐

	Potentially Significant Impact	Potentially Significant Unless Mit.	Less than Significant Impact	No Impact
t. Cause or contribute to an exceedance of applicable surface or groundwater receiving water quality objectives or degradation of beneficial uses?	☐	☐	☒	☐
u. Impact aquatic, wetland, or riparian habitat?	☐	☐	☒	☐
v. Potentially impact stormwater runoff from construction or post construction?	☐	☐	☒	☐
w. Result in a potential for discharge of stormwater pollutants from areas of material storage, vehicle or equipment fueling, vehicle or equipment maintenance (including washing), waste handling, hazardous materials handling or storage, delivery areas, loading docks or other outdoor work areas?	☐	☐	☒	☐
x. Result in the potential for discharge of stormwater to affect the beneficial uses of the receiving waters?	☐	☐	☒	☐
y. Create the potential for significant changes in the flow velocity or volume of stormwater runoff to cause environmental harm?	☐	☐	☒	☐
z. Create significant increases in erosion of the project site or surrounding areas?	☐	☐	☒	☐

a) *Violate any water quality standards or waste discharge requirements?* ***Less Than Significant Impact*** If drainage is necessary, the contractor will be required to obtain and comply with the requirements of a groundwater dewatering discharge permit and/or wastewater permit as required by the Regional Water Quality Control Board (RWQCB). Compliance with applicable RWQCB permit requirements would result in less than significant impacts to water quality.

Additional impacts related to water quality would range over three different phases of project implementation: 1) during the earthwork and construction phase, when the potential for erosion, siltation and sedimentation into on-site drainages would be the greatest; 2) following construction, prior to the establishment of ground cover, when the erosion potential may remain relatively high; and 3) following completion of the project, when impacts related to sedimentation would decrease markedly, but those associated with site runoff would increase.

Compliance with the statewide National Pollutant Discharge Elimination System (NPDES) General Permit for Storm Water Discharges Associated with Construction Activity would prevent stormwater pollution from impacting waters of the U.S. in the vicinity of the project site. Implementation of the mitigation measures identified below would reduce potential water quality impacts to less than significant levels.

Mitigation Measures:

The City- approved Storm Water Management Plan (SWMP) on file in the Planning Department shall emphasize structural and non-structural Best Management Practices (BMPs) in compliance with NPDES Program requirements

b) *Substantially deplete groundwater supplies or interfere substantially with groundwater recharge such that there would be a net deficit in aquifer volume or a lowering of the local groundwater table level (e.g., the production rate of pre-existing nearby wells would drop to a level which would not support existing land uses or planned uses for which permits have been granted)?* ***Less Than Significant Impact.*** The project would

not have the potential to substantially deplete groundwater supplies or interfere with groundwater recharge. Potential dewatering activities associated with construction would be short-term in nature, and would not substantially affect the groundwater table. The project would not have the capacity to increase the amount of water consumed regionally through increased withdrawals from groundwater sources. No significant impacts are anticipated to occur.

c) *Substantially alter the existing drainage pattern of the site or area, including through the alteration of the course of stream or river, in a manner which would result in substantial erosion or siltation on- or off-site?* ***No Impact.*** Alteration of absorption rates is not considered significant, and may be improved because additional landscaping is being provided along with the measures proposed in the Storm Water Management Plan (SWMP). No significant changes in drainage patterns associated with the proposed project are anticipated to occur.

d) *Substantially alter the existing drainage pattern of the site or area, including through the alteration of the course of a stream or river, or substantially increase the rate or amount of surface runoff in a manner which would result in flooding on- or off-site?* ***No Impact.*** .

e) *Create or contribute runoff water which would exceed the capacity of existing or planned stormwater drainage systems or provide substantial additional sources of polluted runoff?* ***No impact..*** Construction of proposed improvements may result in minor changes in the amount of runoff due to a decrease in the amount of impermeable surface area within the project site.

f) *Otherwise substantially degrade water quality?* ***Less Than Significant Impact.*** The project will decrease the amount of impervious areas on the site and abide by the requirements of the Storm Water Management Plan prepared by Cornerstone Engineering..

g) *Place housing within a 100-year flood hazard area as mapped on a federal Flood Hazard Boundary or Flood Insurance Rate Map or other flood hazard delineation map?* ***No Impact.*** The proposed project area is not located within a 100-year flood hazard area. Therefore, no flood related impacts would occur.

h) *Place within a 100-year flood hazard area structures which would impede or redirect flood flows?* ***No Impact.*** The project site is not located within a 100-year flood hazard area.

i) *Expose people or structures to a significant risk of loss, injury or death involving flooding, including flooding as a result of the failure of a levee or dam?* ***No impact..*** As previously stated, the project does not propose any new housing or building structures within the 100-year flood plain.

j) *Inundation by seiche, tsunami, or mudflow?* ***No Impact.*** There are no anticipated impacts to the proposed project from seiche, tsunami or mudflow, as no topographical features or water bodies capable of producing such events occur within the project site vicinity.

k) *Result in an increase in pollutant discharges to receiving waters? Consider water quality parameters such as temperature, dissolved oxygen, turbidity and other typical stormwater pollutants (e.g. heavy metals, pathogens, petroleum derivatives, synthetic organics, sediment, nutrients, oxygen-demanding substances, and trash)?* ***Potentially Significant Unless Mitigated***.

Mitigation Measure:

The requirements of the Corrective Action Plan (on file in the Planning Department) prepared by D-Max Engineering and recommendations made for alternatives shall be met. The groundwater quality shall monitored quarterly by Rubicon Engineering (latest report on file in the Planning Department). . These reports will continue to be submitted to the County of San Diego Department of Environmental Health. The Corrective Action plan prepared by D-Max Engineering (on file in the Planning Department) will be implemented and or modified as to its alternatives for cleanup as required by ongoing field conditions.

l) *Result in significant alternation of receiving water quality during or following construction?* ***Less Than Significant..*** During construction, erosion control will be provided on-site to protect water quality. Operation is not anticipated to result in any water quality impacts.

m) *Could the proposed project result in increased erosion downstream?* ***Less Than Significant*** *Impact .* Given the project's limited size and limited impervious surface, the project would produce a relatively low volume of stormwater runoff that would not result in increased downstream erosion.

n) *Result in increased impervious surfaces and associated increased runoff?* ***Less Than Significant Impact.*** The increase in impervious surface and associated runoff is below the significance threshold established by the City for determining a significant impact.

o) *Create a significant adverse environmental impact to drainage patterns due to changes in runoff flow rates or volumes?* ***Less Than Significant Impact.*** The project does not include mass site grading or substantial changes in project site drainage that would alter drainage patterns, or increase runoff flow rates or volumes.

p) *Tributary to an already impaired water body, as listed on the Clean Water Act Section 303(d) list? If so, can it result in an increase in any pollutant for which the water body is already impaired?* ***Less Than Significant Impact.*** The project site does not adjoin or discharge directly into a Federally-listed water body.

q) *Tributary to other environmentally sensitive areas? If so, can it exacerbate already existing sensitive conditions?* ***Less Than Significant Impact.*** See Response to p) above.

r) *Have a potentially significant environmental impact on surface water quality to either marine, fresh, or wetland waters?* ***Less Than Significant Impact.*** The project would not discharge directly into surface waters nor involve operational characteristics that would result in pollutant discharges into such waters including pesticides, herbicides, fertilizers and similar chemicals.

s) *Have a potentially significant adverse impact on groundwater quality?* ***Less Than Significant Impact.*** The project has been under the jurisdiction of the Site Assessment and Mitigation Division of the County of San Diego Since 2003 . A Corrective Action Plan was prepared by D-Max Engineering and recommendations made for alternatives. The groundwater quality is being monitored quarterly by Rubicon Engineering (latest report attached) and the contaminants are lessening

t) *Cause or contribute to an exceedance of applicable surface or groundwater receiving water quality objectives or degradation of beneficial uses?* ***Less Than Significant Impact.*** See "s)" above. Quarterly monitoring continues.

u) *Impact aquatic, wetland, or riparian habitat?* ***Less Than Significant Impact.*** See Response to Section IV.b) of this document.

v) *Potentially impact stormwater runoff from construction or post construction?* ***Less Than Significant Impact.*** The requirements of the city-approved Storm Water Management Plan (SWMP) (on file in the Planning Department) will be followed during construction and post construction.

w) *Result in a potential for discharge of stormwater pollutants from areas of material storage, vehicle or equipment fueling, vehicle or equipment maintenance (including washing), waste handling, hazardous materials handling or storage, delivery areas, loading docks or other outdoor work areas?* ***Less Than Significant Impact.*** The requirements of the city-approved Storm Water Management Plan (SWMP) (on file in the Planning Department) will be followed during construction and post construction.

x) Result in the potential for discharge of stormwater to affect the beneficial uses of the receiving waters? ***Less Than Significant Impact.*** The requirements of the city-approved Storm Water Management Plan (SWMP) (on file in the Planning Department) will be followed during construction and post construction.

y) Create the potential for significant changes in the flow velocity or volume of stormwater runoff to cause environmental harm? ***Less Than Significant Impact.*** The project will neither increase the volume nor the velocity of stormwater flows, nor indirectly contribute to such impacts as a result of project implementation. The requirements of the city-approved Storm Water Management Plan (SWMP) (on file in the Planning Department) will be followed during construction and post construction.

z) Create significant increases in erosion of the project site or surrounding areas? ***Less Than Significant Impact.*** See Response to Section IV. b) of this document. The requirements of the city-approved Storm Water Management Plan (SWMP) (on file in the Planning Department) will be followed during construction and post construction.

	Potentially Significant Impact	Potentially Significant Unless Mit.	Less than Significant Impact	No Impact
14.9 LAND USE AND PLANNING. Would the project:				
a. Physically divide an established community?	☐	☐	☐	☒
b. Conflict with any applicable land use plan, policy, or regulation of an agency with jurisdiction over the project (including, but not limited to the General Plan, specific plan, local coastal program, or zoning ordinance) adopted for the purpose of avoiding or mitigating an environmental effect?	☐	☐	☐	☒
c. Conflict with any applicable habitat conservation plan or natural community conservation plan?	☐	☐	☐	☒

a) Physically divide an established community? ***No Impact.*** The proposed project will not have an impact on the physical arrangement of an established community. Therefore, no impacts are anticipated to occur.

b) Conflict with any applicable land use plan, policy, or regulation of an agency with jurisdiction over the project (including, but not limited to the general plan, specific plan, local coastal program, or zoning ordinance) adopted for the purpose of avoiding or mitigating an environmental effect? ***No Impact.*** The proposed project changes a portion of the General Plan Land Use Element's to General Commercial as a "cleanup" measure. The portion in question has been used as a service station and commercial site for a number of years. Therefore, no impacts would occur in this regard.

c) *Conflict with any applicable habitat conservation plan or natural community conservation plan?* ***No Impact.*** There is no habitat conservation plan for the site.

	Potentially Significant Impact	Potentially Significant Unless Mit.	Less than Significant Impact	No Impact
14.10 MINERAL RESOURCES. Would the project:				
a. Result in the loss of availability of a known mineral resource that would be of value to the region and the residents of the state?	☐	☐	☐	☒
b. Result in the loss of availability of a locally-important mineral resource recovery site delineated on a local general plan, specific plan or other land use plan?	☐	☐	☐	☒

a) Result in the loss of availability of a known mineral resource that would be of value to the region and the residents of the state? ***No Impact.*** The City's General Plan and Zoning Ordinance would not permit any mineral extraction on or within the vicinity of the project site. Therefore, the project would have no impact.

b) Result in the loss of availability of a locally-important mineral resource recovery site delineated on a local general plan, specific plan or other land use plan? ***No Impact.*** There is no such site on or near this project.

	Potentially Significant Impact	Potentially Significant Unless Mit.	Less than Significant Impact	No Impact
14.11 NOISE. Would the project:				
a. Exposure of persons to or generation of noise levels in excess of standards established in the local general plan or noise ordinance, or applicable standards of other agencies?	☐	☒	☐	☐
b. Exposure of persons to or generation of excessive groundborne vibration or groundborne noise levels?	☐	☐	☒	☐
c. A substantial permanent increase in ambient noise levels in the project vicinity above levels existing without the project?	☐	☒	☐	☐
d. A substantial temporary or periodic increase in ambient noise levels in the project vicinity above levels existing without the project?	☐	☒	☐	☐
e. For a project located within an airport land use plan or, where such a plan has not been adopted, within two miles of a public airport or public use airport, would the project expose people residing or working in the project area to excessive noise levels?	☐	☐	☐	☒
f. For a project within the vicinity of a private airstrip, would the project expose people residing or working in the project area to excessive noise levels?	☐	☐	☐	☒

a) *Exposure of persons to or generation of noise levels in excess of standards established in the local general plan or noise ordinance, or applicable standards of other agencies?* ***Less than Significant Impact.*** The proposed project would create a short-term impact in terms of construction noise. Noise generated by construction and demolition equipment, including trucks, backhoes and other equipment, may temporarily impact nearby sensitive receptors. Construction noise is estimated to be approximately 92 dBA at 50 feet from the source. Pursuant to the City's Noise Ordinance standards, construction activities would be limited to daytime hours for the duration of construction. Also, all vehicles and equipment will use available noise suppression devices and be equipped with mufflers during construction activities. Due to the restricted hours, equipment restrictions, and relatively short period of construction, noise resulting from construction and demolition related activities is not considered a significant impact.

Mitigation Measures:

N 1. Noise sources associated with construction, repairs, remodeling, or the grading of any real property, shall be exempt from the provisions of the City's noise code if conducted from 7:00 a.m. to 6:00 p.m. on Monday through Friday, or from 8:30 a.m. to 4:30 p.m. on Saturday. Construction is prohibited at any time on Sunday or a Federal holiday.

N.2 Equipment will use available noise suppression devices and properly maintained mufflers. Construction noise will be reduced by using quiet or "new technology", equipment, particularly the quieting of exhaust noises by use of improved mufflers where feasible. All internal combustion engines used at the Project site will be equipped with the type of muffler recommended by the vehicle manufacturer. In addition, all equipment will be maintained in good mechanical condition so as to minimize noise created by faulty or poorly maintained engine, drive-train and other components.

N.3 During all site preparation, grading and construction, contractors shall minimize the staging of construction equipment and unnecessary idling of equipment in the vicinity of residential land uses.

N.4 The equipment staging area will be situated so as to provide the greatest distance separation between construction-related noise sources and noise-sensitive receptors nearest the Project site during all Project construction.

N.5 Temporary walls/barriers/enclosures will be erected around stationary construction equipment when such equipment will be operated for an extended period of time and where there are noise sensitive receptors substantially affected. Noise barriers and enclosures will consist of absorptive material in order to prevent impacts upon other land uses due to noise reflection. In addition, complete enclosure structures will close or secure any openings where pipes, hoses or cables penetrate the enclosure structure.

N.6 Notification will be given to residences within 91 meters (300 feet) of planned construction activities thirty (30) days prior to commencement of demolition activity, and will include a brief description of the project, the overall duration of the various construction stages, noise abatement measures that will taken, and the name and phone number of the construction site supervisor or his designee to report any violation of a noise or mitigation standard.

b) *Exposure of persons to or generation of excessive groundborne vibration or groundborne noise levels?* ***Less Than Significant Impact.*** The amounts of construction and demolition required for the proposed facility is not anticipated to generate excessive groundborne vibrations or noise levels. Additionally, this Project is not anticipated to include pile driving activities, therefore, ground borne vibration is not expected to occur. Due to the temporary nature of construction activities, impacts in this regard are considered to be less than significant.

c) *A substantial permanent increase in ambient noise levels in the project vicinity above levels existing without the project?* ***Potentially Significant Unless Mitigated.*** Due to the nature and scope of the proposed project a permanent increase in the ambient noise level in the project vicinity would occur unless mitigated as required by the Car Wash Noise Study prepared by Medlin and Associates.

Mitigation Measures:

1. The equipment selected for inside the car wash should be clearly identified on the plans for the project. The equipment proposed is the Ryko Ultrasonic 2001 wash system with automatic bi-fold doors.

2. The car wash bay should be equipped with the Ryko bi-fold doors. The bi-fold doors should be equipped with appropriate seals at the perimeters such that minimal sound will penetrate to the exterior. A brush type seals should be avoided. The doors should be synchronized such that they do not open until all machinery is completely idle (i.e. the door should not open while the dryers are still spinning down).

3. The support equipment associated with car wash machinery compressor should be housed inside the mechanical equipment room attached to the car wash shell, with no direct vents to the outside which would allow noise emissions.

4. The car wash shell should contain no vents, gaps, penetrations or other openings that will allow noise to penetrate to the exterior of the shell.

5. The existing perimeter wall should be raised to the height of the car wash bay at both the entrance and exit to the bay, sloping down to its existing height over a distance of about twenty feet. A new-construction wall with these characteristics may be installed in lieu of modifying the existing perimeter wall.

6. Select roof top heat pumps which produce law noise emissions: Units should be comparable or superior to the Carrier 50CR060.

d) *A substantial temporary or periodic increase in ambient noise levels in the project vicinity above levels existing without the project?* ***Potentially Significant Unless Mitigated .*** As noted above, the implementation of the proposed project may result in increased noise levels within the project vicinity due to the car wash. See mitigation measures above for finished car wash.

e) *For a project located within an airport land use plan or, where such a plan has not been adopted, within two miles of a public airport or public use airport, would the project expose people residing or working in the project area to excessive noise levels?* ***No Impact.*** As previously stated, the proposed project is located within two miles of a public airport or public use airport but is not in the Airport Influence Area of the Oceanside Municipal Airport.

f) *For a project within the vicinity of a private airstrip, would the project expose people residing or working in the project area to excessive noise levels?* ***No Impact.*** The proposed project site is not located within the vicinity of a private airstrip and would not expose people residing or working in the project area to excessive noise levels.

	Potentially Significant Impact	Potentially Significant Unless Mit.	Less than Significant Impact	No Impact
14.12 POPULATION & HOUSING. Would the project:				
a. Induce substantial population growth in an area, either directly (for example, by proposing new homes and businesses or indirectly (for example, through extension of roads or other infrastructure)?	☐	☐	☐	☒
b. Displace substantial numbers of existing housing, necessitating the construction of replacement housing elsewhere?	☐	☐	☐	☒
c. Displace substantial numbers of people, necessitating the construction of replacement housing elsewhere?	☐	☐	☐	☒

a) Induce substantial population growth in an area, either directly (for example, by proposing new homes and businesses) or indirectly (for example, through extension of roads or other infrastructure)? ***No Impact. Impact.*** The proposed project would not induce growth through the extension or expansion of major capital infrastructure.

b) Displace substantial numbers of existing housing, necessitating the construction of replacement housing elsewhere? ***No Impact.*** The proposed project would not require the removal existing housing, and therefore would not necessitate the construction of replacement housing elsewhere.

c) Displace substantial numbers of people, necessitating the construction of replacement housing elsewhere? ***No Impact.***

	Potentially Significant Impact	Potentially Significant Unless Mit.	Less than Significant Impact	No Impact
14.13 PUBLIC SERVICES. Would the project result in substantial adverse physical impacts associated with the provision of new or physically altered governmental facilities, need for new or physically altered governmental facilities, the construction of which could cause significant environmental impacts, in order to maintain acceptable service ratios, response times or other performance objectives for any of the public services:				
Fire Protection?	☐	☐	☐	☒
Police Protection?	☐	☐	☐	☒
Schools?	☐	☐	☐	☒
Parks?	☐	☐	☐	☒
Other public facilities?	☐	☐	☐	☒

1) *Fire protection?* ***No Impact.*** Proposed project implementation would not result in substantial adverse physical impacts associated with the provision of new or physically altered fire protection facilities.

2) *Police protection?* ***No Impact.*** There are no significant impacts related to police protection or service

anticipated with implementation of the proposed project.

3) *Schools?* ***No Impact.*** Implementation of the proposed project would not result in the need for the construction of additional school facilities. Therefore, no impacts in this regard will occur.

4) *Parks?* ***No Impact.*** Implementation of the proposed project will not affect any existing park facilities nor increase the demand for additional recreational facilities. Therefore, no impacts to parks are anticipated as a result of this project.

5) *Other public facilities?* ***No Impact.*** No significant impacts to other public facilities are anticipated to occur with project implementation.

	Potentially Significant Impact	Potentially Significant Unless Mit.	Less than Significant Impact	No Impact
14.14 RECREATION. Would the project:				
a. Would the project increase the use of existing neighborhood and regional parks or other recreational facilities, such that substantial physical deterioration of the facility would occur or be accelerated?	☐	☐	☐	☒
b. Does the project include recreational facilities or require the construction or expansion of recreational facilities, which might have an adverse physical effect on the environment?	☐	☐	☐	☒

a) *Would the project increase the use of existing neighborhood and regional parks or other recreational facilities such that substantial physical deterioration of the facility would occur or be accelerated?* ***No Impact.*** Implementation of the proposed project will not generate an increase in demand on existing public or private parks or other recreational facilities that would either result in or increase physical deterioration of the facility.

b) *Does the project include recreational facilities or require the construction or expansion of recreational facilities which might have an adverse physical effect on the environment?* ***No Impact.*** Implementation of the proposed project does not include recreational facilities.

	Potentially Significant Impact	Potentially Significant Unless Mit.	Less than Significant Impact	No Impact
14.14 TRANSPORTATION/TRAFFIC. Would the project:				
a. Cause an increase in traffic which is substantial in relation to the existing traffic load and capacity of the street system (i.e., result in a substantial increase in either the number of vehicle trips, the volume to capacity ratio on roads, or congestion at intersections)?	☐	☐	☒	☐
b. Exceed, either individually or cumulatively, a level of service standard established by the county congestion/management agency for designated roads or highways?	☐	☐	☐	☒

	Potentially Significant Impact	Potentially Significant Unless Mit.	Less than Significant Impact	No Impact
c. Result in a change in air traffic patterns, including either an increase in traffic levels or a change in location that results in substantial safety risks?	☐	☐	☐	☒
d. Substantially increase hazards due to a design feature (e.g., sharp curves or dangerous intersections) or incompatible uses (e.g., farm equipment)?	☐	☐	☐	☒
e. Result in inadequate emergency access?	☐	☐	☐	☒
f. Result in inadequate parking capacity?	☐	☐	☐	☒
g. Conflict with adopted policies, plans, or programs supporting alternative transportation (e.g., bus turnouts, bicycle racks)?	☐	☐	☐	☒

a) *Cause an increase in traffic which is substantial in relation to the existing traffic load and capacity of the street system (i.e., result in a substantial increase in either the number of vehicle trips, the volume to capacity ratio on roads, or congestion at intersections)?* ***Less Than Significant Impact.***

The Katz, Okitsu & Associates Traffic Study presented the following table containing the Trip Generation Rates (Based on SANDAG (Not so) Brief Guide of Vehicular Traffic Generation Rates for the San Diego Region, April, 2002)

Scenario	Land Use Type	Units	Quantity	Rate	ADT	AM Peak Hour			PM Peak Our		
						In	Out	Total	In	Out	Total
Existing	Gasoline/small market	Vehicle Fueling Space	12	160	1920	67	67	134	77	77	154
Proposed	Gasoline/convenience Market/car wash	Vehicle fueling space	16	155	2480	99	99	198	112	112	223
Net Trips					560	32	32	64	35	35	70

Based on the estimated trip generation, the traffic report evaluated service levels at potentially affected intersections including the following:

Mission Avenue/Carolyn Circle (Airport Road)

The project study area intersection was evaluated under three scenarios including existing condition, existing plus project, and existing plus project plus cumulative. The level of service analysis was conducted using both intersection capacity utilization (ICU) and the highway capacity manual (HCM) delay method.

Table 14.2 Intersection Capacity Utilization (ICU) Methodology

Intersection		*(1) Existing*	*(2) Existing + Project*	*(3) Existing + Project + Cumulative*	*(4) Project Impact*	*(5) Signif. Project Impact Y/N*	*(6) Sig. Cum. Impact Y/N*
Mission Ave./Carolyn Circle (Airport Road)					0	N	N
	LOS	B	B	B			
	LOS	C	C	C			

(4) Project Impact = Column (2) less Column (1).
(5) Significant Project Impact occurs if A(1) Existing≅ is LOS AE≅ or AF≅ and A(4) Project Impact≅ is 0.001 or greater; or, A(2) Existing plus Project≅ is LOS AE≅ or AF≅ and A(4) Project Impact≅ is 0.010 or greater.
(6) Significant Cumulative Impact occurs if A(3) Existing plus Project plus Cum.≅ is LOS AE≅ or AF≅, and, A(4) Project Impact≅ is 0.010 or greater.

Table 14.3 Highway Capacity Manual (HCM) Methodology

Intersection		*(1) Existing*	*(2) Existing plus Project*	*(3) Existing plus Project plus Cum.*	*(4) Project Impact*	*(5) Signif. Project Impact Y/N*	*(6) Sig. Cum. Impact Y/N*
Mission Ave/Carolyn Circle (Airport Road)	ICU				0.00	N	N
	LOS	B	B	B			
	LOS	C	C	C			

(4) Project Impact = Column (2) less Column (1).
(5) Significant Project Impact occurs if A(1) Existing≅ is LOS AE≅ or AF≅ and A(4) Project Impact≅ is 0.1 seconds delay/vehicle or greater; or, A(2) Existing plus Project≅ is LOS AE≅ or AF≅ and A(4) Project Impact≅ is 1.0 seconds delay/vehicle or greater.
(6) Significant Cumulative Impact occurs if A(3) Existing plus Project plus Cum.≅ is LOS AE≅ or AF≅, and, A(4) Project Impact≅ is 1.0 seconds delay/vehicle or greater.

The project would result in a minor increase in vehicular trips as a result of the construction activity for the proposed project. Anticipated traffic impacts would be minor and from short-term project construction. Therefore, less the significant impacts are anticipated. According to the study the level of service on the intersection will not change. In addition, as the project area is currently not experiencing level-of-service (LOS) deficiencies, no impacts to traffic capacity or volume would occur with implementation of the proposed project.

b) *Exceed, either individually or cumulatively, a level of service standard established by the county congestion management agency for designated roads or highways?* ***No Impact.***. Anticipated traffic impacts would be minor and from short-term project construction. Therefore, less the significant impacts are anticipated. According to the study the level of service on the intersection will not change. In addition, as the project area is currently not experiencing level-of-service (LOS) deficiencies, no impacts to traffic capacity or volume would occur with implementation of the proposed project. The project proposal does not trigger the congestion management agency's LOS requirements for designated roads or highways.

c) *Result in a change in air traffic patterns, including either an increase in traffic levels or a change in location that results in substantial safety risks?* ***No Impact.*** Due to the nature and scope of the proposed project, project implementation would not have the capacity to result in a change in air traffic patterns.

d) Substantially increase hazards due to a design feature (e.g., sharp curves or dangerous intersections) or incompatible uses (e.g., farm equipment)? ***No Impact.*** No public roadways are proposed as part of the

project, therefore, no impacts regarding design features or incompatible uses would occur. The proposed project would use the same access point as the existing project.

e) *Result in inadequate emergency access?* ***No Impact.*** Adequate emergency access shall be provided during both short-term construction and long-term operation of the proposed project. Impacts are not anticipated to be significant.

f) *Result in inadequate parking capacity?* ***No Impact.*** A variance is requested to allow the parking at the pumps under the canopies to be counted to meet the parking requirements. Due to the use of the site as a combined convenience market gas station the location and nature of the proposed project, the gasoline customers and convenience market customers will be in the same vehicles and no additional impacts in regards to parking would occur. An adequate staging area will be provided for short-term construction equipment. No impacts are anticipated in this regard.

Proposed Use	Gross SF	Standard (# of spaces per 1000 SF)	Required parking	Provided
Convenience Market/fueling station/Car Wash	2725	1/200 plus for lot area	22	23 16 at pumps 7 striped

g) *Conflict with adopted policies, plans, or programs supporting alternative transportation (e.g., bus turnouts, bicycle racks)?* ***No Impact.*** Project implementation would not conflict with adopted policies, plans, or programs supporting alternative transportation. Impacts are not anticipated in this regard.

	Potentially Significant Impact	Potentially Significant Unless Mit.	Less than Significant Impact	No Impact
14.15 UTILITIES AND SERVICE SYSTEMS. Would the project:				
a. Exceed wastewater treatment requirements of the applicable Regional Water Quality Control Board?	☐	☐	☐	☒
b. Require or result in the construction of new water or wastewater treatment facilities or expansion of existing facilities, the construction of which could cause significant environmental effects?	☐	☐	☐	☒
c. Require or result in the construction of new storm water drainage facilities or expansion of existing facilities, the construction of which could cause significant environmental effects?	☐	☐	☐	☒
d. Have sufficient water supplies available to serve the project from existing entitlements and resources, or are new or expanded entitlements needed?	☐	☐	☐	☒
e. Result in a determination by the wastewater treatment provider which serves or may serve the project that it has adequate capacity to serve the project=s projected demand in addition to the provider=s existing commitments?	☐	☐	☐	☒
f. Be served by a landfill with sufficient permitted capacity to accommodate the project=s solid waste disposal needs?	☐	☐	☐	☒

	Potentially Significant Impact	Potentially Significant Unless Mit.	Less than Significant Impact	No Impact
g. Comply with federal, state, and local statutes and regulations related to solid waste?	☐	☐	☐	☒

a) *Exceed wastewater treatment requirements of the applicable Regional Water Quality Control Board?* ***No Impact.*** Improvements associated with the proposed project would not exceed wastewater treatment requirements of the Regional Water Quality Control Board (RWQCB).

b) *Require or result in the construction of new water or wastewater treatment facilities or expansion of existing facilities, the construction of which could cause significant environmental effects?* ***No Impact.*** The nature and scope of the proposed project would not require or result in the construction of wastewater treatment facilities. It replaces an existing project..

c) *Require or result in the construction of new stormwater drainage facilities or expansion of existing facilities, the construction of which could cause significant environmental effects?* ***No Impact.*** The nature and scope of the proposed project would not require or result in the expansion of existing storm water drainage facilities.

d) *Have sufficient water supplies available to serve the project from existing entitlements and resources, or are new or expanded entitlements needed?* ***No Impact.*** No new or expanded entitlements would be required with implementation of the proposed project. No impacts are anticipated.

e) *Result in a determination by the wastewater treatment provider which serves or may serve the project that it has adequate capacity to serve the project's projected demand in addition to the provider's existing commitments?* ***No Impact.*** This project replaces an existing project and will not add additional demand..

f) *Be served by a landfill with sufficient permitted capacity to accommodate the project's solid waste disposal needs?* ***No Impact.*** The demolition and removal of existing improvements would generate a minor increase in solid waste. This increase would not be significant in the context of the City's Contract with Oceanside Disposal. Operational activities will result in only a nominal amount of solid waste.

g) Comply with federal, state, and local statutes and regulations related to solid waste? ***No Impact.*** The project will provide the required trash and recycling facilities and meet the requirements for service.

	Potentially Significant Impact	Potentially Significant Unless Mit.	Less than Significant Impact	No Impact
14.16 MANDATORY FINDINGS OF SIGNIFICANCE. Would the project:				
a. Does the project have the potential to degrade the quality of the environment, substantially reduce the habitat of a fish or wildlife species, cause a fish or wildlife population to decrease below self-sustaining levels, threaten to eliminate a plant or animal community, reduce the number or restrict the range of a rare or endangered plant or animal, or eliminate important examples of major periods of California history or prehistory?	☐	☐	☐	☒
b. Does the project have the potential to achieve short-term, to the disadvantage of long-term, environmental goals?	☐	☐	☐	☒
c. Does the project have impacts which are individually limited, but cumulatively considerable (ACumulatively considerable≅ means the project=s incremental effects are considerable when compared to the past, present, and future effects of other projects)?	☐	☐	☐	☒
d. Does the project have environmental effects which will have substantial adverse effects on human beings, directly or indirectly?	☐	☐	☐	☒

16. PREPARATION. The initial study for the subject project was prepared by:

Elizabeth J. Graff, AICP, land use planning consultant

17. DETERMINATION. (To be completed by lead agency) Based on this initial evaluation:

[ ] I find that the proposed project COULD NOT have a significant effect on the environment, and a NEGATIVE DECLARATION will be prepared.

[ ] I find that although the proposed project could have a significant effect on the environment, there will not be a significant effect in this case because the mitigation measures described herein have been included in this project. A MITIGATED NEGATIVE DECLARATION will be prepared.

[ ] I find that the proposed project MAY have a significant effect on the environment, and an ENVIRONMENTAL IMPACT REPORT is required.

18. DE MINIMIS FEE DETERMINATION (Chapter 1706, Statutes of 1990-AB 3158)

[ ] It is hereby found that this project involves no potential for any adverse effect, either individually or cumulatively, on wildlife resources and that a "Certificate of Fee Exemption" shall be prepared for this project.

[ ] It is hereby found that this project could potentially impact wildlife, individually or cumulatively, and therefore fees shall be paid to the County Clerk in accordance with Section 711.4(d) of the Fish and Game Code.

19. **ENVIRONMENTAL DETERMINATION**: The initial study for this project has been reviewed and the environmental determination, contained in Section V. preceding, is hereby approved:

Jerry Hittleman, Environmental Coordinator

20. **PROPERTY OWNER/APPLICANT CONCURRENCE:** : Section 15070(b)(1) of the California Environmental Quality Act (CEQA) Guidelines provides that Lead Agencies may issue a Mitigated Negative Declaration where *the initial study identifies potentially significant effects, but, revisions in the project plans or proposals made by, or agreed to by the applicant before a proposed mitigated negative declaration and initial study are released for public review would avoid the effects or mitigate the effects to a point where clearly no significant effects would occur.* The property owner/applicant signifies by their signature below their concurrence with all mitigation measures contained within this environmental document. However, the applicant's concurrence with the Draft Mitigated Negative Declaration is not intended to restrict the legal rights of the applicant to seek potential revisions to the mitigation measures during the public review process.

Mohsen Arabshahi

Mohsen Arabshahi, property owner

Mohsen General Plan Amendment and Zone Change

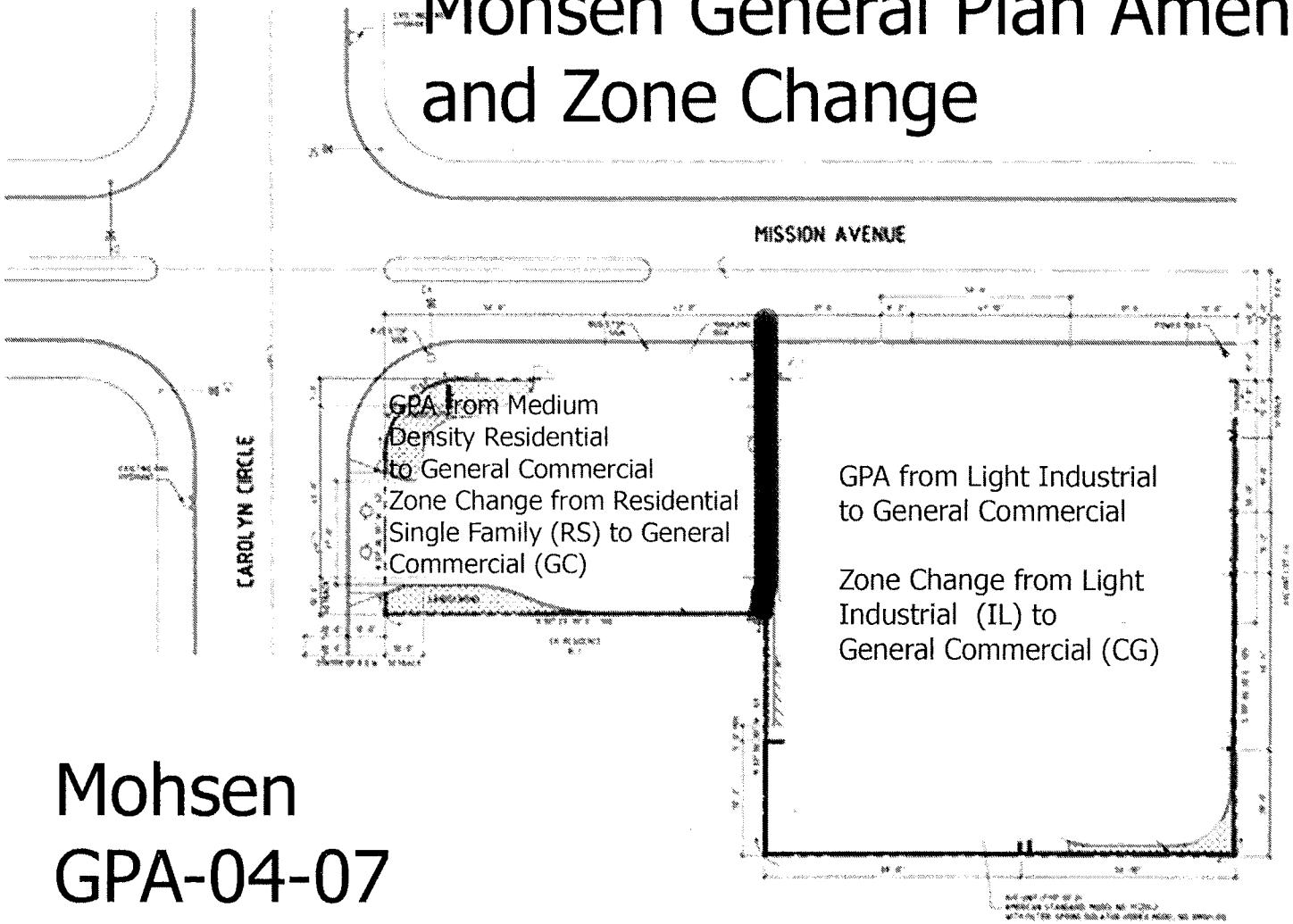

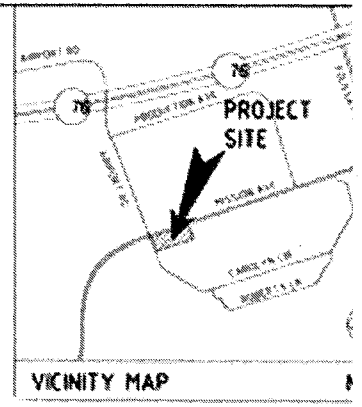

Mohsen
GPA-04-07
ZA-03-07

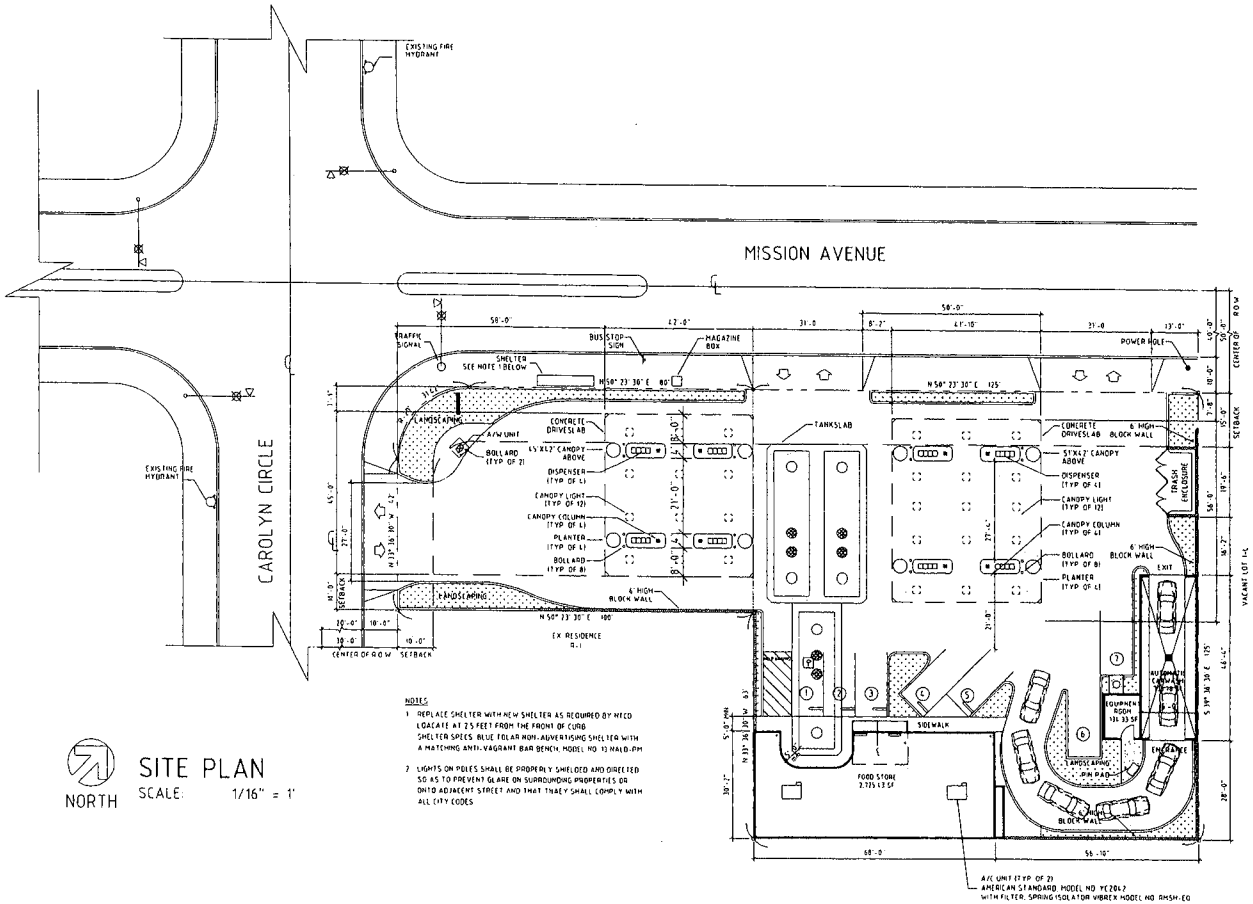

NORTH

SITE PLAN

SCALE: 1/16" = 1'

NOTES

1 REPLACE SHELTER WITH NEW SHELTER AS REQUIRED BY MTDD LOACATE AT 25 FEET FROM THE FRONT OF CURB SHELTER SPECS BLUE POLAR NON-ADVERTISING SHELTER WITH A MATCHING ANTI-VAGRANT BAR BENCH, MODEL NO 13 MALD-PH

2 LIGHTS ON POLES SHALL BE PROPERLY SHIELDED AND DIRECTED SO AS TO PREVENT GLARE ON SURROUNDING PROPERTIES OR ONTO ADJACENT STREET AND THAT THAEY SHALL COMPLY WITH ALL CITY CODES

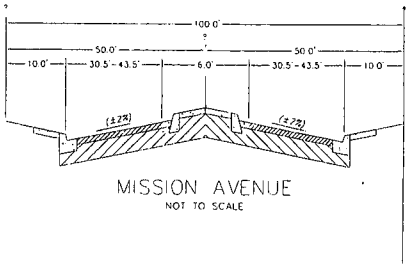

MISSION AVENUE
NOT TO SCALE

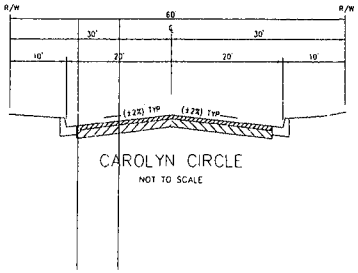

CAROLYN CIRCLE
NOT TO SCALE

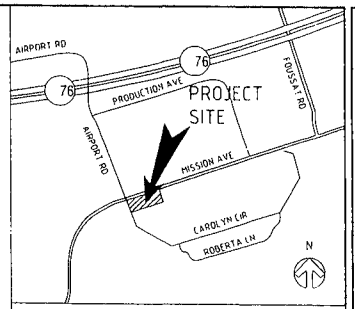

VICINITY MAP NTS

OWNER :
MOHSEN
3213 MISSION AVE
OCEANSIDE CA, 92054
PH 760 945 7222
FAX 760 945 7270

APPLICANT
ANDREW PASZTERKO
2055 N ALVARADO ST ,
LOS ANGELES, CA 90039
ph 323 665 0844
fax 323 661 0723

ARCHITECT
GASOLINE RETAIL FACILITIES CONSULTING
2055 N ALVARADO ST ,
LOS ANGELES, CA 90039
ATTN ANDREW PASZTERKO
CA LIC N C-12253
ph 323 665 0844
fax 323 661 0723

CIVIL ENGINEER
STEVE BARGER
620 MISSION AVE OCEANSIDE, CA 92054
PH 661 325 9474 EXT 111

PROJECT DATA

PROJECT ADDRESS 3213 MISSION AVE OCEANSIDE, CA 92054

THOMAS BROTHERS MAP COORDINATES
PAGE 1086 GRID E5 SAN DIEGO COUNTY

ACCESSOR'S PARCEL NUMBER
160-270-11

EXISTING GENERAL PLAN	RESIDENTIAL AND COMMERCIAL
PROPOSED GENERAL PLAN	GENERAL COMMERCIAL
EXISTING ZONING	COMMERCIAL LIMITED (CL)
PROPOSED ZONING	GENERAL COMMERCIAL (CG)
LOT SIZE	21,739 16 SQ FT
PERCENT OF LANDSCAPED AREA REQUIRED	10 0% OF LOT AREA
PERCENT OF LANDSCAPED AREA PROVIDED	2,200 SQ FT 10 12% OF LOT AREA
PROPOSED BUILDING COVERAGE	36 10%
PERCENT OF PROJECT IN PAVEMENT	27 96%

NUMBER OF STORIES
TWO

PRESENT USE	PROPOSED USE
GAS STATION WITH FOOD STORE	GAS STATION WITH FOOD STORE AND CAR-WASH

TYPE OF CONSTRUCTION
(E) CANOPY II-N
(E) RETAIL V
NEW CAR-WASH II-N

OCCUPANCY CLASS
(E) CANOPY
(E) RETAIL
NEW CAR-WASH

FIRE SPRINKLERS	EXISTING GROSS FLOOR AREA TO BE DEMOLISHED
NONE	NONE

BUILDING CODE
CBC 2007

BUILDING	AREA	PARKING RATIO	PARKING REQUIRED
(E) CANOPY	2,342 67 SQ FT	1/2,500	1
(N) CANOPY	1,889 62 SQ FT	1/2,500	1
(N) FOOD STORE			
GR FLOOR	1,893 83 SQ FT	1/200	9
2ND FLOOR	831 60 SQ FT	1/200	4
NEW CAR-WASH	891 11 SQ FT	-	-
TOTAL	7,848 83 SQ FT		15

PARKING PROVIDED ?

LEGEND
(E) = EXISTING
(N) = NEW

DOCUMENT PREPARED BY
GASOLINE RETAIL FACILITIES CONSULTING
ATTN ANDREW PASZTERKO - ARCHITECT
CALIFORNIA LIC # C-12253
2055 NORTH ALVARADO STREET,
LOS ANGELES, CALIFORNIA 90039
ph 323 665 0844, fax 323 661 0723
andy@gasretail.com

NO	DATE	REVISIONS	PROJECT RELEASE
			ISSUED FOR PLAN CHECK
			AND RELEASE
			CONST RELEASE

ADDRESS 3213 MISSION AVE. OCEANSIDE, CA

PROJECT TITLE NEW GASOLINE RETAIL FACILITY WITH FOOD MARKET AND CAR WASH

Gasoline Retail Facilities Consulting

SHEET CONTENTS SITE PLAN

Date	02 19 07
Scale	AS SHOWN
Drawn	JCAD
Job No	GRFC 3611
Sheet	AS-1
of	sheets

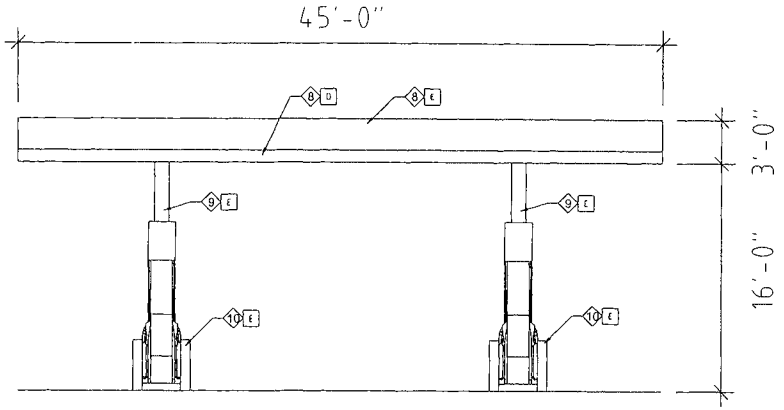

CANOPY 1 WEST ELEVATION
SCALE: 1/4" = 1'

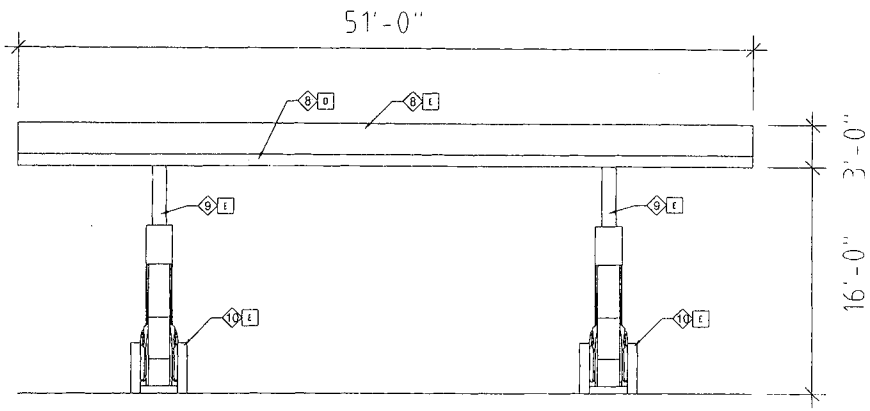

CANOPY 2 WEST ELEVATION
SCALE: 1/4" = 1'

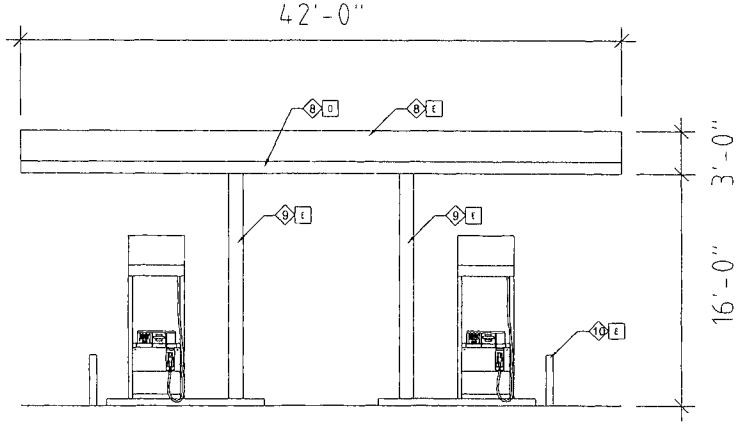

CANOPY 1 NORTH ELEVATION
SCALE: 1/4" = 1'

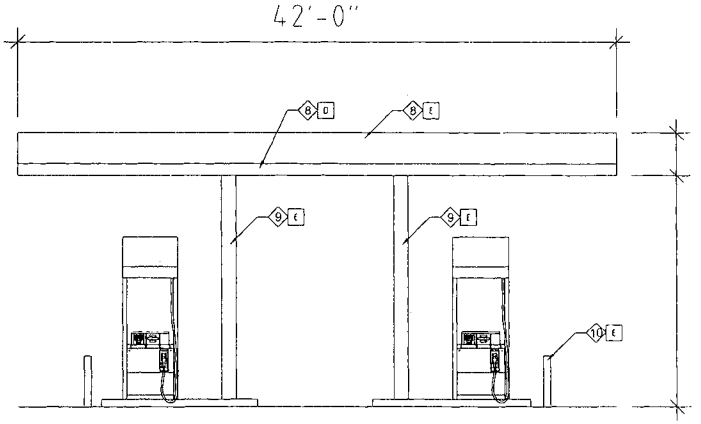

CANOPY 2 NORTH ELEVATION
SCALE: 1/4" = 1'

MATERIALS LEGEND	
1	EXTERIOR PLASTER
2	PLASTER/METAL CONTROL JOINT
3	AUTOMATIC DOOR SYSTEM
4	EXTERIOR LETTER SIGN (SEPERATE PERMIT REQUIRED)
5	TEMPERED CLEAR GLASS W/ALUMINUM FRAME
6	PERGOLAS (WOOD)
7	STEEL DOOR
8	ACM FACIA
9	STEEL COLUMN

COLORS LEGEND	
A	"LA HABRA" X-55 FRENCH VANILLA
B	"LA HABRA" X-580 SIERRA TAN
C	PAINT TO MATCH WALL "LA HABRA" X-55 FRENCH VANILLA
D	GREEN
E	WHITE

DIGALERT
DOCUMENT PREPARED BY
GASOLINE RETAIL FACILITIES CONSULTING
ATTN: ANDREW PASZTERKO - ARCHITECT
CALIFORNIA LIC. N C-17253
2055 NORTH ALVARADO STREET,
LOS ANGELES, CALIFORNIA 90039
ph 323 665 0844, fax 323 6610723
andy@gasretail.com

NO	DATE	REVISIONS

PROJECT RELEASE
ISSUED FOR PLAN CHECK
AGENCY RELEASE
CONST. RELEASE
AS BUILT

ADDRESS
3213 MISSION AVE.
OCEANSIDE, CA

PROJECT TITLE
NEW GASOLINE RETAIL FACILITY WITH FOOD MARKET AND CAR WASH

Gasoline Retail Facilities Consulting

SHEET CONTENTS
CANOPY ELEVATIONS

Date	02 19 07
Scale	AS SHOWN
Drawn	JCAD
Job No	GRFC 3611
Sheet	A-5
of	sheets

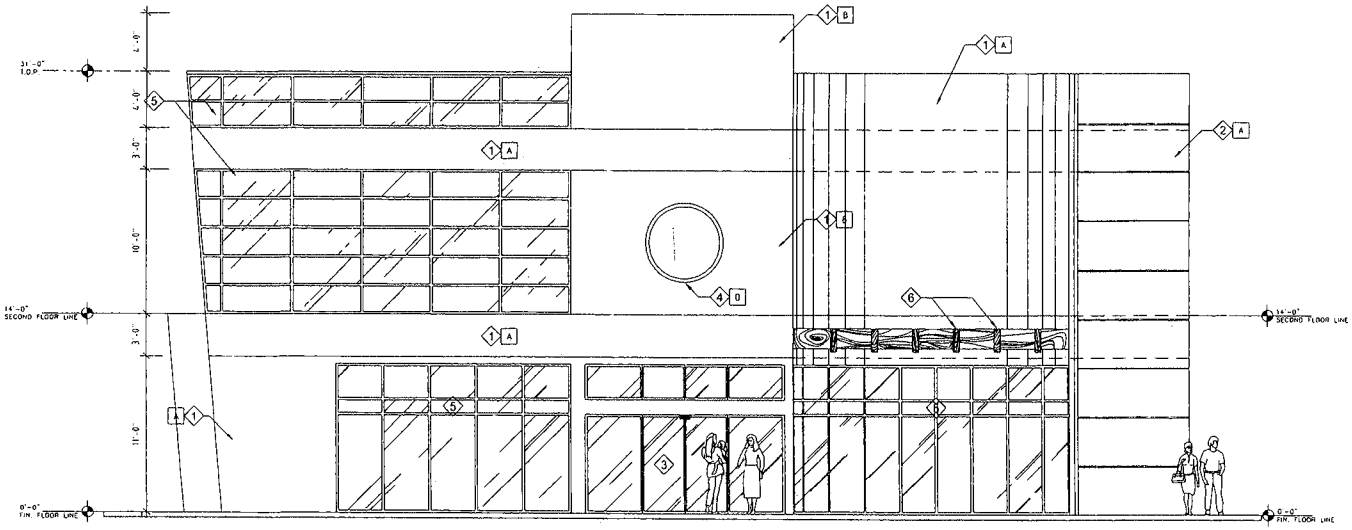

PROPOSED FRONT ELEVATION
SCALE: 1/4" = 1'

MATERIALS LEGEND	
1	EXTERIOR PLASTER
2	PLASTER/METAL CONTROL JOINT
3	AUTOMATIC DOOR SYSTEM
4	EXTERIOR LETTER SIGN (SEPERATE PERMIT REQUIRED)
5	TEMPERED CLEAR GLASS W/ALUMINUM FRAME
6	PERGOLAS (WOOD)
7	STEEL DOOR
8	ACM FACIA
9	STEEL COLUMN

COLORS LEGEND	
A	"LA HABRA" X-55 FRENCH VANILLA
B	"LA HABRA" X-580 SIERRA TAN
C	PAIN TO MATCH WALL "LA HABRA" X-55 FRENCH VANILLA
D	GREEN
E	WHITE

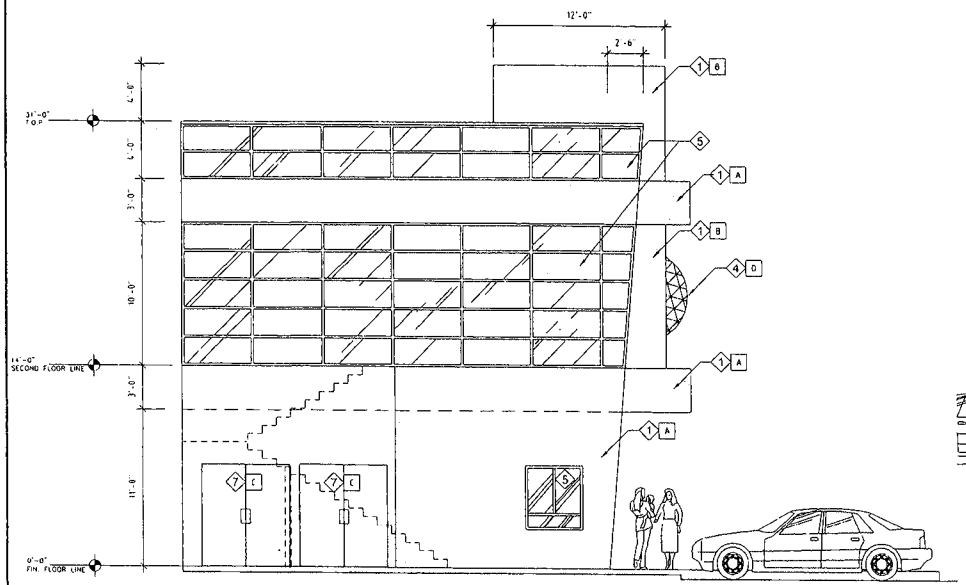

PROPOSED LEFT SIDE ELEVATION
SCALE: 1/4" = 1'

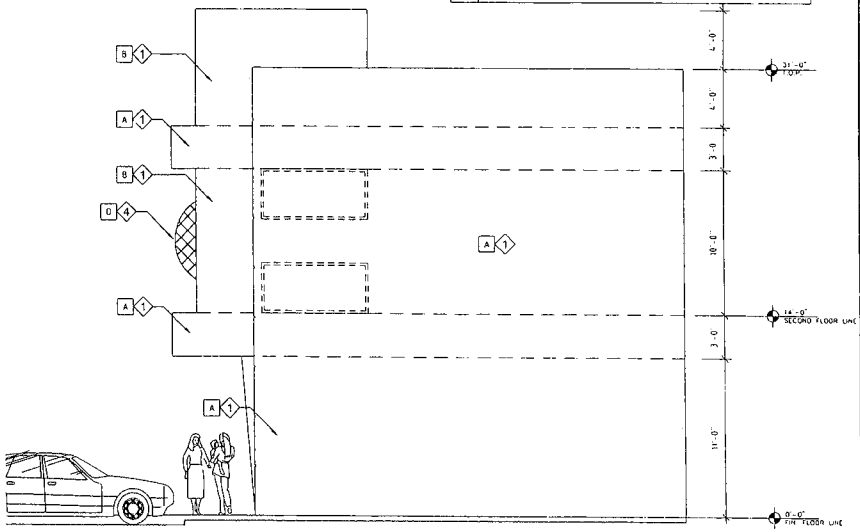

PROPOSED RIGHT SIDE ELEVATION
SCALE: 1/4" = 1'

DIGALERT
DOCUMENT PREPARED BY:
GASOLINE RETAIL FACILITIES CONSULTING
ATTN: ANDREW PASZTERNAK - ARCHITECT
CALIFORNIA LIC. # C-17253
7055 NORTH ALVARADO STREET
LOS ANGELES, CALIFORNIA 90039
ph. 323.665.0866, fax 3236610723
andy@gasretail.com

NO	DATE	REVISIONS	PROJECT RELEASE
			ISSUED FOR PLAN CHECK
			50% RELEASE
			CONSTRUCTION RELEASE
			AS BUILT

ADDRESS
3213 MISSION AVE.
OCEANSIDE, CA

PROJECT TITLE
NEW GASOLINE RETAIL FACILITY WITH FOOD MARKET AND CAR WASH

Gasoline Retail Facilities Consulting

SHEET CONTENTS
ELEVATIONS

Date 06 15 06
Scale AS SHOWN
Drawn JCAD
Job No GRFC 3611

Sheet
A-3
of sheets

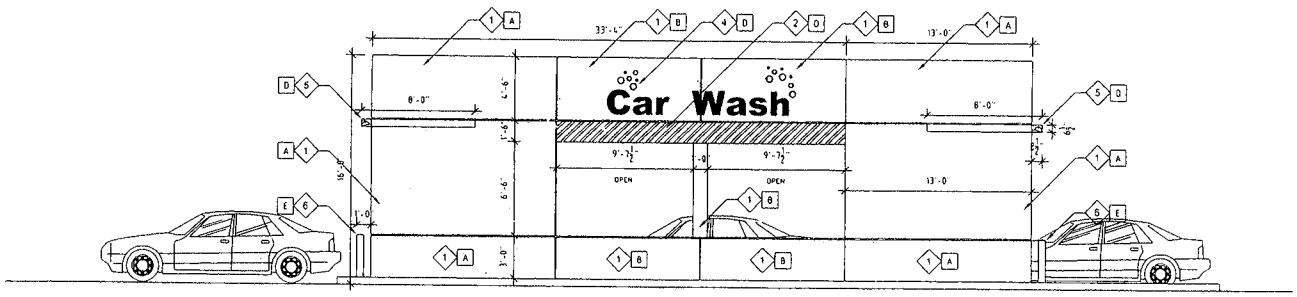

SIDE ELEVATION
SCALE: 1/4" = 1'

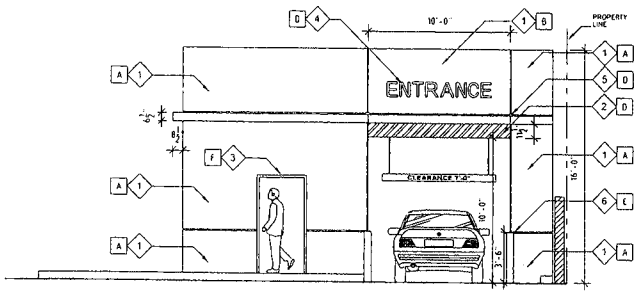

FRONT ELEVATION
SCALE: 1/4" = 1'

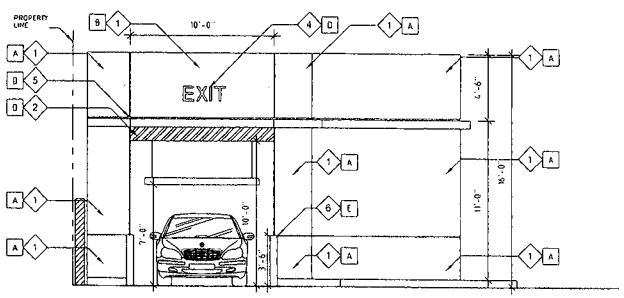

REAR ELEVATION
SCALE: 1/4" = 1'

MATERIALS LEGEND	
1	EXTERIOR STUCCO/METAL CONTROL JOINT
2	ACM METAL PANEL
3	STEEL DOOR
4	INTERNALLY ILLUMINATED CHANNEL LETTERS
5	LIGHTING WIDE FASCIA
6	Ø6" BOLLARDS

COLORS LEGEND	
A	"LA HABRA" X-580 SIERRA TAN
B	"LA HABRA" X-55 FRENCH VANILLA
C	PAIN TO MATCH WALL "LA HABRA" X-55 FRENCH VANILLA
D	GREEN
E	WHITE
F	PAIT TO MATCH THE WALL "LA HABRA" X-55 FRENCH VANILLA

DIGALERT

DOCUMENT PREPARED BY
GASOLINE RETAIL FACILITIES CONSULTING
ATTN: ANDREW PASZTERNAK - ARCHITECT
CALIFORNIA LIC. # C-12753
2055 NORTH ALVARADO STREET
LOS ANGELES, CALIFORNIA 90039
ph 323.665.0844, fax 323.661.0723
andy@gasretail.com

NO	DATE	REVISIONS	PROJECT RELEASE
			ISSUED FOR PLAN CHECK
			BID RELEASE
			CONST. RELEASE
			AS BUILT

ADDRESS
3213 MISSION AVE.
OCEANSIDE, CA

PROJECT TITLE
NEW GASOLINE RETAIL FACILITY WITH
FOOD MARKET AND CAR WASH

Gasoline Retail Facilities Consulting

SHEET CONTENTS
CAR-WASH ELEVATIONS

Date 06.15.06
Scale AS SHOWN
Drawn ACAD
Job No GRFC 3611
Sheet A-4.1
of sheets

Mohsen
Mission Ave
3213 Mission Ave, Oceanside, CA 92054
© 2007 Europa Technologies
Google
Pointer 33°12'49.00" N 117°20'52.41" W Streaming 100%
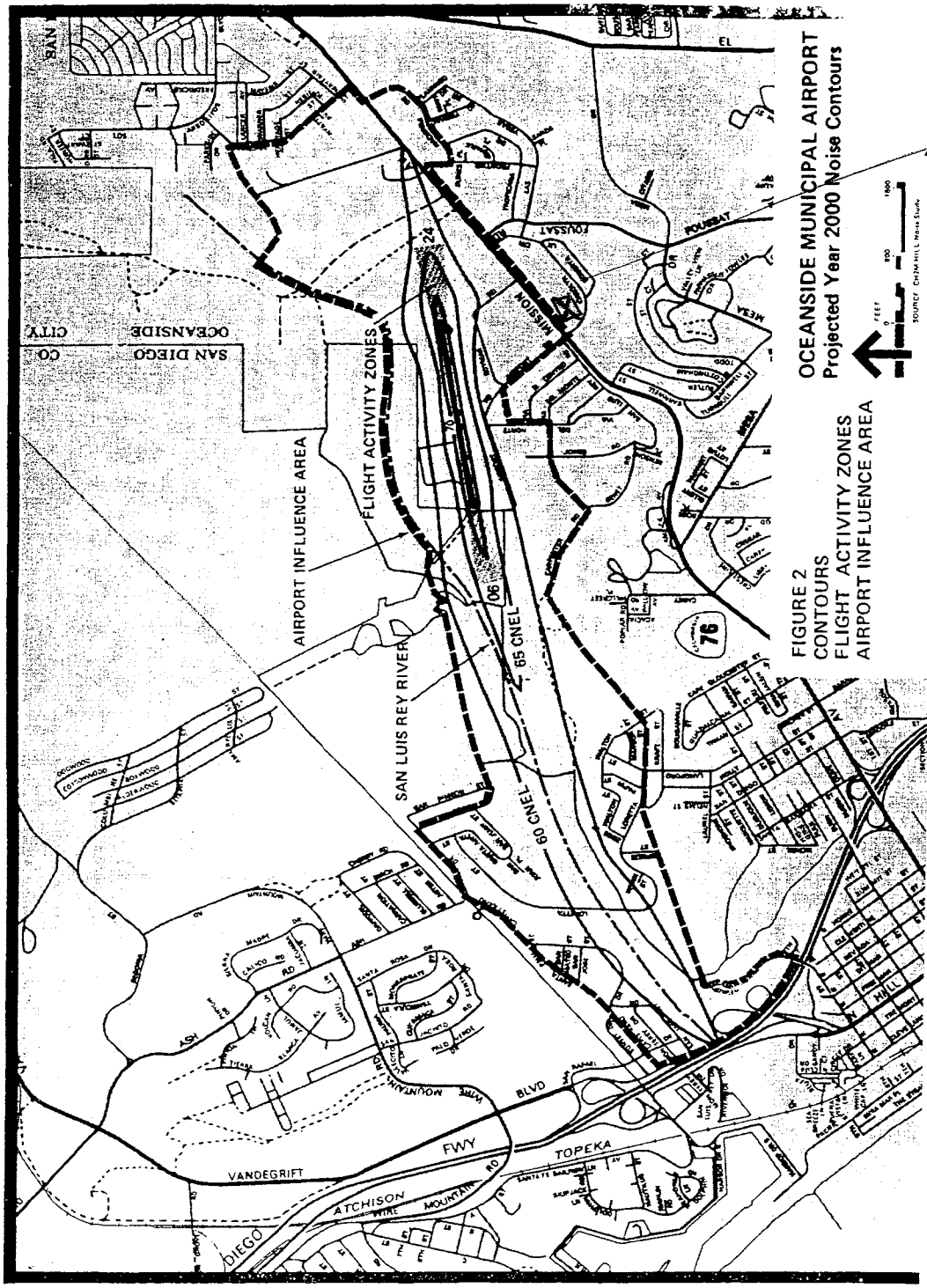
FIGURE 2 – PROJECTED NOISE CONTOURS, FLIGHT ACTIVITY ZONES AND AIRPORT INFLUENCE AREA