ITEM NO. 10

STAFF REPORT

CITY OF OCEANSIDE

DATE: March 19, 2008

TO: Honorable Mayor and City Councilmembers

FROM: Water Utilities Department

SUBJECT: **APPROVAL OF A PROFESSIONAL SERVICES AGREEMENT IN THE AMOUNT OF $215,277.27 AND A RELATED LEASE AGREEMENT FOR A GRANULAR ACTIVATED CARBON SYSTEM FOR TRICHLOROPROPANE REMOVAL AT THE MISSION BASIN GROUNDWATER PURIFICATION FACILITY**

SYNOPSIS

Staff recommends that the City Council approve a professional services agreement (PSA) in an amount of $215,277.27 with Siemens Water Technologies Corporation of La Mirada for the manufacture, delivery, installation and setup of a Granular Activated Carbon System for Trichloropropane (TCP) Removal at the Mission Basin Groundwater Purification Facility; approve a 36-month lease agreement in the amount of $893,874.96 for the granular activated carbon system, and authorize the City Manager to execute the agreements upon receipt of all supporting documents.

BACKGROUND

McGuire Malcolm Pirnie Environmental Consultants, Inc. (McGuire) conducted a pilot study at the Mission Basin Groundwater Purification Facility (Exhibit A) that resulted in identifying a treatment technology to remove TCP from the source wells. The pilot testing was successful and McGuire prepared an Engineer's Report and submitted this to the California Department of Health Services (CDHS). CDHS sent a letter to the City for "temporary approval" until the operation of the GAC contactors pilot study is complete and the City is in the permit approval process.

CDHS regulations required monitoring for (TCP) in 2003 as part of the California Unregulated Contaminant Rule. It was first detected in early 2003 in wells 1, 2, and 3, which are located at the Mission Basin Groundwater Purification Facility. Subsequent sampling confirmed the presence of the contaminant. TCP contamination is also present in a new well, Well 9, located at the Mission Facility, and is expected to be present in two additional wells, Wells 10 and 11 that are currently under construction near the intersection of Mission Avenue and Foussat Road. Wells 4 and 5, which are located on the north side of the San Luis Rey River near College Boulevard, had no TCP detected.

TCP was an impurity in certain soil fumigant products with the active ingredient 1,3-dichloropropene marketed under trade names such as "DD" and "Telone." Historically, the Mission Basin was a major agricultural area for tomatoes, corn and strawberries, so most likely the application of these soil fumigants was the source of the contaminant. TCP has also been reportedly used as a solvent and extractive agent. As a solvent, it has been used as a paint and varnish remover, a cleaning and degreasing agent, and a cleaning and maintenance solvent. There is no evidence at this point that would indicate that the TCP contamination in the City's wells is a result of the use of TCP as a solvent.

Wells 1, 2, and 3 were taken off line due to the presence of TCP in the wells and use of the wells has been discontinued since then in order to eliminate any potential threat to public safety attributable to the contamination while staff researched and implemented methods to remove TCP. The facility is currently running at a reduced volume using wells 4 and 5. Production of the plant is slightly less than 2 million gallons per day (MGD). Before shutting down wells 1, 2, and 3, the flow was just above 3 MGD.

ANALYSIS

Since the City has received temporary approval for the GAC Contactors from CDHS, it was recommended to lease the equipment and treat the TCP in order to utilize the available well water.

TCP contamination of the three existing wells and one new well at the Mission Basin Groundwater Purification Facility is prohibiting the plant from running at full capacity. All four wells exceed the notification level set by CDHS and are not in use at this time. Knowledge of this contaminant is relatively new and the long-term effects are not known, but it is recognized as a carcinogen. The California Environmental Protection Agency has issued a proposed Public Health Goal of 0.7 Parts per trillion for TCP. As water demands increase, it is essential that the facility produce maximum capacity as soon as possible.

The Mission Basin Groundwater Purification Facility must also produce 6.3 MGD to comply with the City's groundwater recovery agreement with the Metropolitan Water District. To assist in ensuring that the facility can operate at full capacity, the San Diego County Water Authority is working with the Water Utilities Department to complete two additional wells: wells 10 and 11. During the well location process, the City explored non-contaminated areas (near wells 4 and 5) for these proposed wells; unfortunately the required water supply was not found in these areas resulting in their present locations within the contaminated source, which requires treatment. These new wells, along with the existing wells, will provide enough water to produce 6.3 MGD when the TCP removal system is installed. All of these wells are essential for keeping the plant in operation while other wells are undergoing maintenance and repair. The pilot study conducted by McGuire determined the GAC treatment process by which TCP could be removed from the supply water. The GAC treatment was determined to be the most cost-effective treatment option, and that treatment, as opposed to abandoning the wells and finding alternative water sources, is the only feasible solution to the TCP problem under the circumstances. It is, therefore, staff's view that installing a single GAC

treatment plant at the Mission Basin Groundwater Purification Facility is the best and most cost-effective option for ensuring that the city has adequate capacity to serve TCP-free water into the future.

On August 29, 2006, one bid was received and one letter of declining to bid was opened for the Lease Agreement of Granular Activated Carbon System for TCP Removal at the Mission Basin Groundwater Purification Facility. The apparent low bidder was Siemens Water Technologies Corp, of La Mirada. Siemens Water Technologies Corp. was awarded the contract on July 25, 2007, but subsequently failed to enter into a contract with the City resulting in the award being withdrawn. On October 16, 2007, staff solicited proposals from five qualified manufacturers (see Exhibit B).

On November 14, 2007, two proposals were received (Pure Effect, Inc., and Siemens Water Technologies Corp.) and one declination letter was received. The proposals were reviewed and the City began negotiations with Pure Effect, Inc. On January 7, 2008, Pure Effect Inc. officially withdrew their offer to provide the GAC System, thus terminating the negotiations. The City then entered into negotiations with Siemens Water Technologies and shortly thereafter was able to finalize the terms and conditions of the Lease Agreement. The Panel recommends that Siemens Water Technologies be awarded the contract to provide, install and lease the Granular Activated Carbon System for TCP Removal.

Siemens Water Technologies will manufacturer, deliver, and install a total of five 20,000# activated carbon steel vessels to facilitate the removal of TCP from the source wells as described below. The lease agreement is for the leasing of the system for a term of 36-months for a total lease amount of $893,874.96. At the conclusion of the lease agreement term, the City will have the option of purchasing the equipment at a price of $180,481.25, or requesting that Siemens disassemble and remove the system at a price of $92,277.10. A recommendation to either purchase or return the equipment will be requested at the end of the lease term.

FISCAL IMPACT

The Mission Basin Groundwater Purification Facility Expansion Project (712.857426.7070) and (715.857425.5701) has an approximate combined balance of $1,722,946. Therefore, sufficient funds are available for the Siemens PSA. The engineer's estimate to lease the equipment for three years and construct the ancillary facilities for the project is $1,289,633.48. The City is currently pursuing litigation against the parties responsible for the contamination in order to recover all costs incurred as a result of the contamination, including the full cost of this Siemens PSA.

COMMISSION OR COMMITTEE REPORT

Does not apply.

CITY ATTORNEY'S ANALYSIS

The referenced documents have been reviewed by the City Attorney and approved as to form.

INSURANCE REQUIREMENTS

The City's standard insurance requirements will be met.

RECOMMENDATIONS

Staff recommends that the City Council approve a professional services agreement (PSA) in an amount of $215,277.27 with Siemens Water Technologies Corporation of La Mirada for the manufacture, delivery, installation and setup of a Granular Activated Carbon System for Trichloropropane (TCP) Removal at the Mission Basin Groundwater Purification Facility; approve a 36-month lease agreement in the amount of $893,874.96 for the granular activated carbon system, and authorize the City Manager to execute the agreements upon receipt of all supporting documents.

PREPARED BY:

Greg Blakely
Administration Manager

SUBMITTED BY:

Peter A. Weiss
City Manager

REVIEWED BY:

Michelle Skaggs Lawrence, Deputy City Manager

Lonnie Thibodeaux, Water Utilities Director

Teri Ferro, Financial Services Director

Exhibit A - Site Map

Exhibit B - RFP Mailing List

Mission Basin Groundwater Purification Facility

Exhibit A

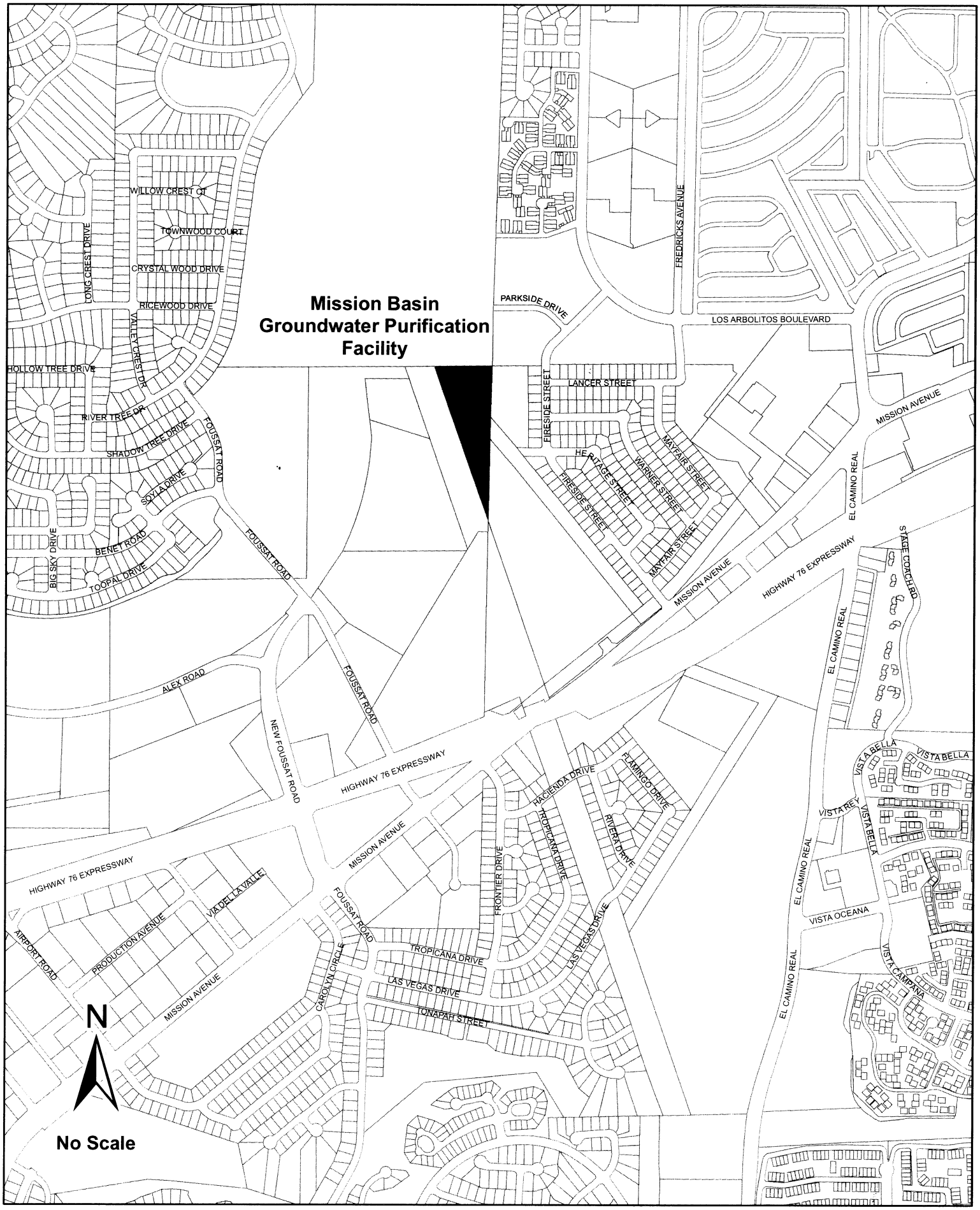

GAC LEASE AGREEMENT RFP MAILING LIST

Company	Address	City	State	Zip	First Name	Last Name	Title	Phone	Fax
Siemens Water Technologies Corp.	14250 Gannet Street	La Mirada	CA	90638	Larry	Burbach	Sales	562-413-4357	651-633-5074
Calgon Carbon Corporation	12832 Imperial Hwy	Santa Fe Springs	CA	90670	Fitzroy	Hamilton		562-864-3800	562-864-4334
Carbon Activated Corp.	250 E. Manville Street	Compton	CA	90220	Dale	Kerr		310-885-4555	310-885-4558
Norit Americas	3200 University Ave.	Marshall	TX	75670	David	Herrera	Program Manager	903-935-4722	903-938-0913
Pure Effect, Inc.	611 West Palm Ave.	Orange	CA	92868	Caleb	Osborn		714-715-5759	714-639-8530

Exhibit B

CITY OF OCEANSIDE

PROFESSIONAL SERVICES AGREEMENT

THIS AGREEMENT is made and entered into this ___day of _____, 2008, by and between the CITY OF OCEANSIDE, a municipal corporation, hereinafter designated as "CITY", and Siemens Water Technologies Corp., hereinafter designated as "MANUFACTURER".

RECITALS

A. CITY desires to obtain professional services from an independent manufacturer for the above named project.

B. MANUFACTURER has submitted a proposal to provide equipment and services for the CITY in accordance with the terms set forth in MANUFACTURER'S Terms and Conditions of Sale of Goods and/or Services ("MANUFACTURER'S Terms");

C. CITY desires to contract with MANUFACTURER as an independent manufacturer and MANUFACTURER desires to provide goods and services to CITY as an independent manufacturer.

D. MANUFACTURER has demonstrated its competence and professional qualifications necessary for the satisfactory performance of the services designated herein by virtue of its experience, training, education and expertise.

NOW, THEREFORE, THE PARTIES MUTUALLY AGREE AS FOLLOWS:

1.0 **SCOPE OF WORK.** The project is more particularly described as follows: The Work to be performed under this Contract shall be as set forth in MANUFACTURER'S proposal #071105A.R2 dated February 20, 2008 ("MANUFACTURER'S Proposal") unless otherwise provided for in the Agreement. The milestones set forth in Manufacturer's Proposal are predicated on the anticipated "Notice to Proceed" document. In the event that the Notice to Proceed date shifts, then MANUFACTURER shall have the right to shift the dates in MANUFACTURER'S proposal accordingly.

1.1 **PROFESSIONAL SERVICES PROVIDED BY MANUFACTURER.** The professional services to be performed by MANUFACTURER shall consist of the

Work set forth in MANUFACTURER'S Proposal.

1.1.1 Work closely with the Water Utilities Director in performing work in accordance with this Agreement in order to receive clarification as to the result which the CITY expects to be accomplished in connection with MANUFACTURER's Proposal. Results expected outside of the scope of MANUFACTURER's Proposal shall be subject to the change mechanism set forth in Section 4 of MANUFACTURER'S Terms. The Water Utilities Director, under the authority of the City Manager, shall be the CITY'S authorized representative in the interpretation and enforcement of all work performed in connection with theMANUFACTURER'S Proposal. The Water Utilities Director may delegate authority in connection with this Agreement to the Water Utilities Director's designees. For the purposes of directing the MANUFACTURER'S performance in accordance with this Agreement, the Water Utilities Director delegates authority to Jason Dafforn.

1.1.2 The MANUFACTURER has provided a list of all the anticipated subcontractors that will be utilized for the work described in this Agreement in Exhibit A hereto.

1.1.3 Visit and carefully examine the location of the project as often as necessary to become acquainted with all conditions which are visible and which might have an impact upon the construction of the project.

1.1.4 Upon completion of construction, prepare, approve and sign a set of As-Built record drawings to the extent set forth in the "Clarifications" section of MANUFACTURER'S Proposal.

1.1.5 Provide office and field assistance to the City during the construction period upon request by Water Utilities Director to include the services listed below:

a. Provide consultation and advice to the City during construction of the project.

b. Review and comment on detailed construction drawings, shop and erection drawings submitted by the manufacturer, subcontractors and suppliers for compliance with the construction contract documents.

c. Review and comment on laboratory, shop and mill test reports on materials and equipment.

d. Prepare needed reports and notices.

e. Provide periodic visits to the site to monitor construction.

f. Attend meetings with the Water Utilities Director or his designees. Such meetings will be limited to the initial "kick-off" meeting, one additional progress meeting and any other meeting as mutually agreed in writing by the parties.

MANUFACTURER shall not be responsible to provide any service specifically set forth in the 'Exclusions', 'Clarifications' , 'Table 1" or other sections of MANUFACTURER'S Proposal that are noted to be the responsibility of others.

1.2 **SERVICES PROVIDED BY CITY**. The CITY shall perform the following services:

1.2.1 Provide access to all public improvement plans and records and furnish one copy of drawings and reports requested.

1.2.2 Upon request, verify the location of existing CITY owned utilities.

1.2.3 Provide all legal advertising mailings and postings required.

1.2.4 Duplicate all final plans and specifications.

1.2.5 Provide all necessary surveying and testing required, including geotechnical engineering services if required during construction.

1.2.6 Provide overall project management.

1.2.7 Provide all local, state, federal or other permits required for installation and operation of the equipment; provided, however, that MANUFACTURER will give reasonable assistance in the application and procurement thereof.

2.0 **TIMING REQUIREMENTS.** All work shall be performed in compliance with the timing milestones as defined in the MANUFACTURER's Proposal.

3.0 **CONSTRUCTION CRITERIA AND STANDARDS.** All work shall be performed in accordance with applicable CITY, state and federal codes and criteria. In the performance of its professional services, MANUFACTURER shall use the degree of care and skill ordinarily exercised by MANUFACTURER under similar conditions.

4.0 **INDEPENDENT CONTRACTOR.** MANUFACTURER'S relationship to the CITY shall be that of an independent contractor. MANUFACTURER shall have no authority, express or implied, to act on behalf of the CITY as an agent, or to bind the CITY to any obligation whatsoever, unless specifically authorized in writing by the Water Utilities Director. MANUFACTURER shall be solely responsible for the performance of any of its employees, agents or subs under this agreement.

MANUFACTURER shall report to the CITY any and all employees, agents and suppliers performing work in connection with this project, and all shall be subject to the reasonable approval of the CITY.

5.0 **CITY BUSINESS LICENSE.** Prior to the commencement of any work under this agreement, the MANUFACTURER shall obtain and present a copy of an Oceanside City Business License to the Water Utilities Director.

6.0 **WORKERS' COMPENSATION.** Pursuant to Labor Code section 1861, the MANUFACTURER hereby certifies that the MANUFACTURER is aware of the provisions of Section 3700 of the Labor Code which require every employer to be insured against liability for Workers' Compensation or to undertake self-insurance in accordance with the provisions of that Code, and the MANUFACTURER will comply with such provisions and provide certification of such compliance as a part of these Award Documents. The certification shall be in accordance with Subsections 7.3 through 7.8 of this Agreement.

7.0 **LIABILITY INSURANCE.**

7.1 MANUFACTURER shall, throughout the duration of this Agreement, maintain comprehensive general liability and property damage insurance, or commercial general liability insurance, covering all operations of MANUFACTURER, its agents and employees, performed in connection with this Agreement including, but not limited to, premises and automobile.

7.2 MANUFACTURER shall maintain liability insurance in the following minimum limits:

Comprehensive General Liability Insurance
(bodily injury and property damage)

Combined Single Limit Per Occurrence	$ 1,000,000

General Aggregate	$ 2,000,000*
Commercial General Liability Insurance (bodily injury and property damage)	
General limit per occurrence	$ 1,000,000
General limit project specific	$ 2,000,000
Automobile Liability Insurance	$ 1,000,000

*General aggregate per year, or part thereof, with respect to losses or other acts or omissions of MANUFACTURER under this Agreement.

7.2.1 If coverage is provided through a Commercial General Liability Insurance policy, a minimum of 50% of each of the aggregate limits shall remain available at all times. If over 50% of any aggregate limit has been paid or reserved, the CITY may require additional coverage to be purchased by the MANUFACTURER to restore the required limits. The MANUFACTURER shall also notify the CITY'S Project Manager promptly of all losses or claims over $25,000 resulting from work performed under this contract, or any loss or claim against the MANUFACTURER resulting from any of the MANUFACTURER'S work.

7.3 All insurance companies affording coverage to the MANUFACTURER for the purposes of this Section shall add the City of Oceanside as "additional insured" under the designated insurance policy for all work performed under this Agreement. Insurance coverage provided to the CITY as an additional insured shall be primary insurance and other insurance maintained by the CITY, its officers, agents and employees shall be excess only and not contributing with insurance provided pursuant to this Section.

7.4 All insurance companies affording coverage to the MANUFACTURER pursuant to this Agreement shall be insurance organizations authorized by the Insurance Commissioner of the State of California to transact business of insurance in the state or be rated as A-X or higher by A.M. Best.

7.5 All insurance companies affording coverage shall provide thirty (30) days written notice to the CITY should the policy be cancelled before the expiration date. For the purposes of this notice requirement, any material change in the policy prior to the expiration shall be considered a cancellation.

7.6 MANUFACTURER shall provide evidence of compliance with the insurance

requirements listed above by providing a Certificate of Insurance and applicable endorsements, in a form satisfactory to the City Attorney, concurrently with the submittal of this Agreement.

7.7 MANUFACTURER shall provide a substitute Certificate of Insurance no later than thirty (30) days prior to the policy expiration date. Failure by the MANUFACTURER to provide such a substitution and extend the policy expiration date shall be considered a default by MANUFACTURER and may subject the MANUFACTURER to a suspension or termination of work under the Agreement.

7.8 Maintenance of insurance by the MANUFACTURER as specified in this Agreement shall in no way be interpreted as relieving the MANUFACTURER of any responsibility whatsoever and the MANUFACTURER may carry, at its own expense, such additional insurance as it deems necessary.

8.0 **PROFESSIONAL ERRORS AND OMISSIONS INSURANCE.** Throughout the duration of this agreement and four (4) years thereafter, the MANUFACTURER shall maintain professional errors and omissions insurance for work performed in connection with this Agreement in the minimum amount of One Million dollars ($1,000,000).

MANUFACTURER shall provide evidence of compliance with these insurance requirements by providing a Certificate of Insurance.

9.0 Reserved.

10.0 Reserved.

11.0 **NO CONFLICT OF INTEREST.** The Environmental Services business segment of MANUFACTURER shall not be financially interested in any other CITY contract for this project. For the limited purposes of interpreting this section, the MANUFACTURER shall be deemed a "City officer or employee", and this Section shall be interpreted in accordance with Government Code section 1090. In the event that the MANUFACTURER becomes financially interested in any other CITY contract for this project, that other contract shall be void. The MANUFACTURER shall indemnify and hold harmless the CITY, under Section 9 above, for any claims for damages resulting from the MANUFACTURER'S violation of this Section.

12.0 Reserved.

13.0 **COMPENSATION.** For work performed by MANUFACTURER in accordance with this Agreement, CITY shall pay MANUFACTURER the total contract price of $ 215,277.27 (the Total Contract Price); provided, however, that that the City acknowledges and agrees that (i) MANUFACTURER'S price may increase by the amount of any incremental sales tax increase above and beyond the 7.75% calculation included in the Total Contact Price; and (ii) .the Total Contract Price does not include the 'disassembly and removal' and 'equipment purchase' options set forth in MANUFACTURER'S Proposal, which items are included in the Master Lease Agreement between the City of Oceanside and Siemens Financial Services; provided, however, that the 'disassembly and removal' work will not be funded through Siemens Financial Services and that any mention to such work therein is for purposes of convenience only.

14.0 **TERMINATION OF AGREEMENT.**
If any portion of the work is terminated or abandoned by the CITY, then the CITY shall pay MANUFACTURER for any work completed up to and including the date of termination or abandonment of this Agreement, including MANUFACTURER'S documented and reasonable costs related to the uncompleted portion of the Work, in accordance with Section 13. The CITY shall be required to compensate MANUFACTURER only for work performed in accordance with the Agreement up to and including the date of termination.

15.0 Reserved

16.0 **ENTIRE AGREEMENT.** This Agreement, along with Seller's Terms and Conditions of Sale of Goods and/or Services comprises the entire integrated understanding between CITY and MANUFACTURER concerning the work to be performed for this project and supersedes all prior negotiations, representations or agreements

17.0 **INTERPRETATION OF THE AGREEMENT.** The interpretation, validity and enforcement of the Agreement shall be governed by and construed under the laws of the State of California.

The MANUFACTURER shall be responsible for complying with all local, state and federal laws whether or not said laws are expressly stated or referred to herein.

Should any provision herein be found or deemed to be invalid, the Agreement shall be construed as not containing such provision and all other provisions, which are otherwise lawful, shall remain in full force and effect, and to this end the

provisions of this Agreement are severable.

18.0 **AGREEMENT MODIFICATION.** This Agreement may not be modified orally or in any manner other than by an Agreement in writing, signed by the parties hereto.

19.0 **DISPUTE RESOLUTION.**

a. Any controversy or claim arising out of or relating to this Agreement, or concerning the breach or interpretation thereof, shall be first submitted to mediation, the cost of which shall be borne equally by the parties.

b. No suit shall be brought on this contract unless all statutory claims filing requirements have been met.

20. **NOTICES.** All notices, demands, requests, consents or other communications which this Agreement contemplates or authorizes, or requires or permits either party to give to the other, shall be in writing and shall be personally delivered or mailed to the respective party as follows:

TO CITY:

Lonnie Thibodeaux
Water Utilities Director
300 North Coast Highway
Oceanside, CA 92054

With a copy to:

TO MANUFACTURER:

Larry Burbach/Sales Manager
Siemens Water Technologies Corp.
14250 Gannett Street
La Mirada, CA 90638

Environmental Services Contract Manager
181 Thorn Hill Road
Warrendale, PA 15086

Either party may change its address by notice to the other party as provided herein.

Communications shall be deemed to have been given and received on the first to occur:

a. Actual receipt at the offices of the party to whom the communication is to be sent, as designated above, or

b. Three (3) working days following the deposit in the United States mail of registered or certified mail, postage prepaid, return receipt requested, addressed to the offices of the party to whom the communication is to be sent, as designated above.

21.0 **SIGNATURES.** The individuals executing this Agreement represent and warrant that they have the right, power, legal capacity and authority to enter into and to execute this Agreement on behalf of the respective legal entities of the MANUFACTURER and the CITY.

IN WITNESS WHEREOF the parties hereto for themselves, their heirs, executors, administrators, successors and assigns do hereby agree to the full performance of the covenants herein contained and have caused this Professional Services Agreement to be executed by setting hereunto their signatures:

SIEMENS WATER TECHNOLOGIES CORP.

By: _____ VICE PRESIDENT
Name/Title

By: _____
Name/Title Peter J. Davis, Secretary

_____
Employer ID No.

CITY OF OCEANSIDE

By: _____
Peter A. Weiss, City Manager

APPROVED AS TO FORM:

_____
City Attorney

NOTARY ACKNOWLEDGMENTS OF MANUFACTURER MUST BE ATTACHED.

G:\Word Documents\AGREEMENTS\PROFESSIONAL SERVICES AGREEMENTS\Professional Services Agreement Long Form 2004.doc

Renee J. Cypher
Notary

COMMONWEALTH OF PENNSYLVANIA
Notarial Seal
Renee J. Cypher, Notary Public
Forward Twp., Butler County
My Commission Expires Oct. 26, 2009
Member, Pennsylvania Association of Notaries

Exhibit A

MANUFACTURER'S SUBCONTRACTOR(S)

Bragg Crane
6251 Paramount Boulevard
Long Beach, CA 90805
Contact: Byron Ferguson /Eric Coffin
Telephone: 562 984 2400
Crane used to off-load and set equipment at site.

SIEMENS

February 20, 2008

City of Oceanside / Office of the Water Utilities Project Manager
300 N. Coast Highway
Oceanside, CA 92054
Attn: Lonnie Thibodeaux

Dear Mr. Thibodeaux,

Siemens Water Technologies Corp. (Siemens) is pleased to submit this revised proposal for your consideration for your **REQUEST FOR PROPOSALS – GRANULAR ACTIVATED CARBON SYSTEM FOR TCP REMOAL [715-85-7425]**. Reference the body of this proposal and TABLE 1, SCOPE OF SUPPLY CHECKLIST, for additional information.

The offering covers all major components identified in this proposal, delivery, interconnect pipe to boundaries, installation, sterilization, start-up and training and is based upon the following City of Oceanside provided documents:

- City of Oceanside Water Utilities Department cover letter dated 10/16, 3 pgs
- GAC Proposal Form, 1 pg
- GRANULAR ACTIVATED CARBON CONTACTORS AND MEDIA specification, 19 pgs
- CITY OF OCEANSIDE PROFESSIONAL SERVICES AGREEMENT, rev 3-2005, 12 pgs
- MANUFACTURER PROPOSAL – RATING FORM, 1 pg
- Addendum No. 1, dated November 1, 2007, 3 pgs

DESIGN CRITERIA

The system is designed to treat well water at an average flowrate of 3,600 gpm through four (4) vessels, with a fifth vessel utilized as stand-by, for the reduction of 1,2,3-TCP.

Description	System
Feed Source	RO Permeate
Operational Flow Rate	3,600 gpm
Operational Pressure	<50 psi
Max Flow Rate (5-Vessel Capacity)	5,500 gpm
Operational Flow Rate per Vessel	900 gpm
Min Flow Rate per Vessel	225 gpm
Max Flow Rate per Vessel	1,100 gpm
Backwash Flow Rate	1,000 gpm
Backwash Pressure	>30 psi
Backwash Source	Potable
Operational Schedule	Undefined
Daily Average Volume	Undefined
-1,-2,-3 TCP	Undefined
EBCT @ Operational Flow	5.9 min

Siemens recommends the use of five (5) HP1220ST-125 GAC Adsorbers to treat the RO permeate. All five adsorbers will operate in parallel configuration, with one unit in standby, per the specification. Each adsorber is 12' diameter ASME code designed for 125 psig at 150°F. The straight side of each vessel is 5' allowing for 25% carbon bed expansion while maintaining a low profile. The five adsorbers arranged side by side in a straight line will fit within your footprint. Each adsorber will contain 3 sample points on the straight side plus an effluent sample. Any pipe material that can be exposed to air pressure during media slurry will be SCH10 316Lss. Piping that is not exposed to air pressure will be SCH 80 PVC. Each adsorber will include 20,000 lbs of prewashed AQUACARB® 1230C coconut shell based granular activated carbon (GAC), per addendum #1, for a total supply of 100,000 lbs. Pressure drop through each adsorber will be less than 9 psi at operational flowrate. Each adsorber will include an effluent flow meter and Auma modulating operator (per job walk request of Jason Dafforn and Scott Tucker) to maintain a balanced flow of 900 gpm through each of the four (4) adsorber in operation.

Reference the following documents:

- PFD 071105A-01 and the layout drawing 071105A-02 for additional detail.
- TABLE TWO for a detailed description of an HP1220ST-125 Adsorber.
- TABLE THREE panel details for additional power distribution and control panel information.
- Standard HP1220ST-125 Adsorber drawing for information only. Detailed design drawings for your particular system would be provided with the submittal package.

MAJOR COMPONENTS

Major mechanical components include:

• Liquid Phase GAC System	
o Vessel w/ladder access	(5), Siemens HP1220ST-125
o Treated Water Flow Meter	(5), Siemens Sitrans 5000
o Backwash Water Flow Meter	(1), Siemens Sitrans 5000
o Manual Butterfly Valve	(27), Pratt MKII
o Modulating Operator	(5), Auma SARWG07
• Power Distribution Panel	(1), Siemens (see table 3)
• Control Panel	(1), Siemens (see table 3)

GENERAL INFORMATION

This proposal includes delivery, off-loading, installation, pressure testing of Siemens provided piping, disinfection of Siemens provided equipment and piping, site backwash/rinse of pre-soaked carbon and startup of the system. Startup testing of the effluent water for organics is to be provided by the City of Oceanside.

Equipment will be assembled on an appropriately sized concrete pad. Pad by others.

Siemens electrical, mechanical, structural and coatings specifications will apply, except as noted. 3rd party vendor (valves, etc.) standard coatings will apply.

SIEMENS

PRICING

REQUEST FOR PROPOSALS – LEASE AGREEMENT OF GRANULAR ACTIVATED CARBON SYSTEM FOR TCP REMOVAL [715-85-7425]

GAC Proposal Form

Item	Units	Qty.	Unit Price	Amount
1. Fabrication, Delivery and install.[1]	LS	1	$215,277.27	$215,277.27
2. Lease of GAC Contactors[2]	Month	36	$24,829.86	$893,874.96
			TOTAL	$1,109,152.23
3. Disassembly and removal.	LS	1	$92,277.10	$92,277.10
4. Equipment Purchase Option	LS	1	$180,481.25	$180,481.25

Delivery and install for Item 1 above- 180 calendar days from notice to proceed, attaining schedule defined in the RFP. Reference attached Gantt chart for additional detail.

Notes:
The above pricing includes tax at 7.75%. Future sales tax increases will increase the amount of the Total Monthly Payment or any other payment due to Seller.
At the end of the 36 month lease, the Owner will choose one (1) of the items #3 or #4.

[1] Includes initial fill of GAC, equipment and media delivery, field services as defined in this proposal
[2] Includes vessels, manifolds, valves, controls, panels

COMMERCIAL TERMS

Payment Terms –Fabrication, Delivery, Install (includes media, per above)

- Payment Terms are net 30 days.

Delivery

- Submittal drawings 3 weeks after receipt of approved purchase order and signed terms and conditions.
- Refer to Gantt chart, attached, for further details.

Exclusions (Price Does Not Include the Following):

- Site preparation including developing a concrete pad, grouting, etc.
- Winterization/weather protection
- Startup, modifications and training trips and services not specifically defined in this proposal.
- The supply of interconnecting electrical materials from Siemens provided panels to existing SCADA
- The supply of interconnect pipe material/hardware from Siemens boundary to pad tie-in points. Reference layout drawing 071105A-02 for additional information.
- Demolition, removal, transfer or disposal of existing equipment.
- Specialty electrical testing, including but not limited to insulation, resistance, grounding.
- Specialty tools used for construction, testing or startup of equipment.
- Temporary water collection storage tanks. Water for GAC slurry and start-up functions will be potable water (backwash supply) and will be sent to existing backwash drain.
- Temporary or permanent light, power or water
- Temporary construction facilities
- Electricity, temporary or permanent
- Temporary construction roads, walks or parking areas
- Warranty bond

Clarifications

- As built drawings required for final payment shall consist of final process flow diagram, 2-D layout drawing and panel drawings.
- The following sections are referenced in the bid spec but were not provided and are not considered applicable to this project. Section 01731 (Installation Data) and 01821 (Instruction of Operations and Maintenance Personnel).
- Loose ship manifolds for field assembly will not be crated.
- Inlet distributors are standard open slot design to allow for fine removal during backwash. Screens are not included.
- It shall be the Purchaser's responsibility at the time start-up service is requested that jobsite conditions be ready for start-up service. All necessary utilities, such as air, water, electrical and low voltage terminations shall be connected and functional. In addition, all process items directly related to the instrumentation system shall be installed and ready for startup. Field Start-up and Training Services for this project are based on two (2) trips to the site. One trip for GAC equipment and activated carbon and one trip for controls. (Any additional trips required to complete startup, resulting from non-Siemens Water Technologies equipment being non-functional or any additional time spent as a result of the Purchaser's failure to comply with the above, shall be charged to the Purchaser at the current technician demand

service rate of $900/day plus travel and living expenses. We require notification at least ten (10) working days prior to the date start-up service is required.

Terms of Proposal

- Proposal pricing valid through March 31, 2008 unless specifically noted elsewhere in this proposal.

- **Service** Replacement services were not specified and have not been provided at this time. Siemens looks forward to the opportunity to present our service capabilities for this project.

- **Warranty** Subject to the following sentence, Seller warrants to Buyer that the equipment goods and services shall materially conform to the description in Seller's Documentation and shall be free from defects in material and workmanship. The foregoing warranty shall not apply to the resin and goods and services that are specified or otherwise demanded by Buyer and is not manufactured or selected by Seller, as to which (i) Seller hereby assigns to Buyer third party warranties made to Seller to the extent assignable, and (ii) Seller shall have no other liability to Buyer under warranty, tort, or any other legal theory. If Buyer gives Seller prompt written notice of breach of this warranty within thirty (30) months from delivery or twenty-four (24) months from acceptance, whichever occurs first (the "Warranty Period"), Seller shall, at its sole option and as Buyer's sole remedy, repair or replace the subject parts or refund the price paid to Seller therefor. If Seller determines that any claimed breach is not in fact, covered by this warranty, Buyer shall pay Seller its then customary charges for repair or replacement made by Seller. Seller's warranty is conditioned on Buyer's (a) operating and maintaining the goods and services in accordance with Seller's instructions, (b) not making any unauthorized repairs or alterations, and (c) not being in default of any payment obligation to Seller. Seller's warranty does not cover damage caused by chemical action or abrasive material, misuse or improper installation (unless installed by Seller). THE WARRANTIES SET FORTH IN THIS SECTION ARE SELLER'S SOLE AND EXCLUSIVE WARRANTIES. SELLER MAKES NO OTHER WARRANTIES, EXPRESS OR IMPLIED, INCLUDING, WITHOUT LIMITATION, ANY WARRANTY OF MERCHANTABILITY OR FITNESS FOR PURPOSE.

- **Terms and Conditions** The parties intend that the attached Siemens Financial Services, Inc. Master Equipment Lease Agreement (the "Lease Agreement") and related documents, the Siemens Water Technologies Corp. Terms and Conditions of Sale of Goods and/or Services (the "Siemens Agreement") and the City of Oceanside Professional Services Agreement (the "PSA"), all as negotiated and mutually-agreed, shall govern this transaction and that the negotiated Siemens Agreement and PSA comprise an integrated agreement that sets forth the terms and conditions for Seller's goods and services not contemplated under the Lease Agreement.

SIEMENS

Thank you for this opportunity to provide this quotation. Please contact me at 619-301-3236 should you have questions or if we may be of further assistance.

Sincerely,
Siemens

Sandi Marshall
Sales Account Manager

Attachments: *Siemens Financial Services Lease Proposal*
Gantt chart
Proposed PFD and layout drawing
Adsorber GA drawing
GAC product literature
References, potable

TABLE ONE SCOPE OF SUPPLY CHECK LIST

No	Work Scope Item	Others	Siemens
1	Equipment system(s) as proposed herein		X
2	Equipment quality assurance check on site prior to startup/training.		X
3	System layout	X	X
4	Site(s) for the Siemens Water Technologies equipment/facility that comply with the requirements of the hydraulic profile, process flow or special design requirements, including concrete pad foundation	X	
5	Equipment assembly per Siemens general equipment drawings		X
6	Valved supply of temporary pump test water to the Siemens Water Technologies equipment/facility battery limits(s), if applicable.	X	
7	Instrumentation and controls field calibration		X
8	Field testing of unit assemblies including hydrotesting		X
9	Technical direction of start-up including training, Two trips, two mandays – one trip for GAC System training and one trip for Automation training.		X
10	Supply of clean backwash water for initial backwash/rinse at startup and backwash water for continued operation as required.	X	
11	Cleaning and chemical disinfection of GAC adsorber and piping		X
12	Delivery of initial load of GAC and installation into the adsorbers		X
13	Freeze protection and/or insulation	X	
14	O&M Manuals (hard copy and electronic version in PDF format)		X
15	Spent GAC profiling	X	

TABLE TWO - HP1220ST-125

SYSTEM SPECIFICATION SUMMARY:

HP1220ST Liquid Phase Adsorbers are designed to treat a wide range of contaminated process streams. All piping and valves are configured for parallel or isolation flows. Each adsorber includes GAC inlet and outlet piping, and backwash capabilities. All vessels are typical construction for Granular Activated Carbon Filters. The system consists of five adsorbers with all piping, valves, and gauges assembled for ease of operation. The adsorbers are equipped with underdrains capable of maximum flow rate of 1100 GPM.

EACH VESSEL:

- Vessel Diameter ..... 144"
- Side Shell Height ..... 60"
- Overall Height (Approx.) ....15'-4"
- Working Pressure ..... 125 psi @ 150 °F
- Manway:
  - Flanged at side shell .... .20"
  - Elliptical type at head ....14" x 18"
- Sample Ports on Side Shell ..... (3)
- Vessel Volume ..... 7520 gal.
- Vessel Carbon Capacity ..... 20,000 lbs.
- Carbon Bed Volume-Typical ..... 714 Ft^3
- Maximum Flow Rate Typical ..... 1100 GPM
- Empty Bed Contact Time/ Vessel ..... 5.9 min/vessel @ 900 GPM
- Design Criteria ..... ASME
- Code Stamping ..... YES
- Material ..... Carbon Steel
- Supports ..... Wide Flange Legs
- Lifting ..... Lifting Lugs
- Seismic ..... Zone 4
- Interior Surface Prep SSPC-SP5
- Interior Surface Coating ..... Plasite 4110 35 mil dft min
- Exterior Surface Primer ..... (1 coat) 2-3.5 dry mils
  ..... Tnemec Series 10 Primer
- Exterior Surface Coating ..... (2 coats) 1.5-2.0 mils per coat
  ..... Tnemec Series 29 Tufcryl
- Color ..... Chowder

UNDERDRAINS:

- External ring header ..... Sch 10 316L Stainless Steel
- Septa Screens ..... 8 ea-316L Stainless Steel V-Wire Screens 4 ½" Dia x 10"

VALVE ASSEMBLY AND PIPING:

- Piping:
  - Process Piping (in proximity to air) ..... Sch 10 316L Stainless Steel
  - Process Piping (not in contact with air) ..... Sch 80 PVC
  - GAC Transfer Piping ..... 4" Sch 10 316L Stainless Steel
- Valves:
  - Process ..... Per AWWA C504
    ..... 8" Butterfly, Ductile Iron Body w/ductile iron Disk
  - GAC Transfer ..... 4" Flanged 316 Stainless Steel Full Port Ball Valve
  - Vent/Wash ..... 2" Bronze Ball Valve
  - Sample Ports (3) ..... 1/2" Bronze Ball Valve

WEIGHT:

- Adsorber Shipping Weight ..... 22,500 lb
- Adsorber Carbon Weight ..... 20,000 lb
- Adsorber Operating Weight ..... 72,500 lb

TABLE THREE –AUTOMATION SCOPE OF SUPPLY

Our itemized electrical scope of supply is listed below. Only items specifically listed will be provided.

Item	Qty.	Description
A.	1	Carbon System Master Control Panel, designated CMCP-1, custom manufactured in a NEMA 3R rated, Stainless steel, strut or equipment mounted enclosure. To operate on 120v, single phase service (To be sourced from power distribution panel, Item B). To control a HP series 5-Vessel GAC system, to run in parallel mode. To include: 1 Siemens Water Technologies LC Controller. To include: • Main Processor • Local I/O o Digital Inputs (12) o Digital Outputs (24) o Analog Inputs (12) o Analog Outputs (8) 1 OI 3000 Operator Interface 1 Loop Power Supply 1 Uninterruptible Power Supply 1 Lot of miscellaneous devices, terminals, control breaker, and fuses.
B.	1	Power Distribution Panel, designated PDP-1, custom manufactured in a NEMA 3R rated, Stainless steel, strut or equipment mounted enclosure. (with dead-front inner door) To operate on 120v, single phase service. To provide direct access to Main Panel. To include: 1 Main Breaker 1 Control Power Transformer 480:120 5 Valve Power Feed Breakers 1 Lot of miscellaneous devices, terminals, control breaker, GFCI receptacles, and fuses.
C.	1	Lot PLC Programming Services, to provide the following functionality: • Modulation of Effluent Valve, for each of 5 vessels, to maintain the flow to a operator set-point, (based on a effluent flow meter from each vessel) • Display Backwash flow rate

SIEMENS FINANCIAL SERVICES

February 13, 2008

Mr. Greg Blakley
Administration Manager
City of Oceanside
300 North Coast Highway
Oceanside, CA 92054

Re: GAC System for TCP Removal

Dear Mr Blakley:

Siemens Financial Services, Inc. ("SFS") is pleased to outline the following lease proposal to The City of Oceanside (the "Lessee") for your review and consideration. Upon your approval, this proposal shall constitute Lessee's application to SFS.

Type of Lease	Lease with stated Purchase Option
Lessor:	SFS, its affiliates, assigns or nominees
Lessee:	City of Oceanside
Equipment Description:	Siemens Water Technologies GAC System for TCP removal.
Total Equipment Cost:	It is anticipated that the Total Equipment Cost will not exceed $773,552.00 ("Maximum Equipment Cost").
Vendor/Contractor:	Siemens Water Technologies
Equipment Location:	Mission Basin Groundwater Purification Facility
Delivery Date:	No later than September 30, 2008
Lease Term:	Thirty-Six (36) months. The Lease Term will commence on and as of the Commencement Date.
Commencement Date:	As to each item of Equipment, the date specified in the applicable Lease as the Lease Commencement Date.

Lease Payments:	Lessee will be required to make thirty-six (36) equal and consecutive fixed monthly Lease Payments, each in arrears and each in an amount equal to 2.978979% per $1.00 of the Total Equipment Cost or $23,043.95 per month plus applicable sales taxes resulting in a Total Monthly Payment of $24,829.86 as of this date [note: future sales tax increases will increase the amount of the Total Monthly Payment]. The Lease Payments are valid through October 30, 2008. In the event that Lease acceptance (as evidenced by an executed Delivery and Acceptance Certificate) and funding does not occur prior to that date, Lessor's agreement to enter into this transaction will terminate.
End of Lease Purchase Option Payment:	$167,500.00 plus applicable sales taxes. As of this date the Total Purchase Payment would be $180,481.25 [note: future sales tax increases will increase the amount of the Total Purchase Payment].
Prepayment Option:	The Lessee will have the option to prepay its obligations under the Lease as specified in the Lease.
Non-Appropriation:	The Lease is subject to termination by the Lessee in the event funds for payment of the Lease are not appropriated for a given fiscal year.
Insurance:	Lessee must provide evidence of physical damage and liability insurance in an amount and from an insurance carrier satisfactory to SFS. SFS must be listed on the policies as loss payee and additional insured, as applicable, and a certificate of insurance is to be provided to the Lessor.
Title:	Title to the Equipment will transfer to Lessee upon acceptance of the Equipment, subject to divestment for default or non-appropriation of funds by Lessee.
Grant of Security Interest:	SFS requires that it be granted a first priority security interest in the Equipment.
Legal Opinions:	An opinion will be required by Lessee's Legal Counsel as to, among other things, the legality, enforceability, authority, title and execution of the Lease. The Opinion is subject to approval by Lessor.
Proposal Expiration:	The proposal must be accepted by March 31, 2008.

Documentation:

All documentation will be provided by Lessor and must be satisfactory to all parties concerned. The following standard documentation, among others, will be required for this transaction:

1. Master Equipment Lease Agreement
2. Municipal Contract Addendum
3. Lease Schedule(s)
4. Delivery & Acceptance Certificate
5. Amortization Schedule
6. Insurance Letter
7. Opinion of Counsel
8. Resolution
9. Officer's Certificate
10. Other documents required pursuant to lease approval.

Lessor may, at its discretion, order UCC, judgment, tax and similar searches against Lessee. Additional documentation and/or information may be required based upon the results of those searches. All fees and costs for documentation, insurance, maintenance, filing, registration and searches relating to the transaction, and all items of a similar nature, will be for Lessee's account.

Acceptance:

Lessee must acknowledge its approval of this lease proposal by signing and returning the enclosed copy of this letter to the Lessor.

The terms and conditions outlined herein are not all-inclusive and are based upon information provided to date. This proposal does not represent an offer or commitment by Lessor to enter into a lease transaction or to purchase the Equipment described in this proposal, and does not create any obligation for Lessor. A commitment to enter into the transaction described herein may only be extended by Lessor after this transaction has been approved by all appropriate credit and other authorities within Lessor and a "written commitment letter" has been issued by Lessor. Closing of this proposed transaction will be subject to, among other things, there having occurred no material adverse change in the Lessee's financial condition or business operations or in the economic and/or regulatory conditions existing prior to the closing and, subject further, to the execution by Lessee and Lessor, and delivery to Lessor, of all documents required by Lessor, all in form and substance acceptable to Lessor. This proposal may be withdrawn or modified by Lessor at anytime prior to a definitive written commitment letter to enter into a lease transaction with Lessee being issued by Lessor and accepted by Lessee. Lessor shall have the sole right to assign this proposal, any commitment letter or any lease between Lessee and Lessor. All rates stated herein are based upon current money cost, tax rates and tax law assumptions. Should any changes occur, the rates will be adjusted accordingly.

Please feel free to contact me if you have any questions, or would like to discuss this proposal in greater detail. Upon Lessor's receipt of a properly countersigned copy of this proposal letter, the Lessor shall promptly begin the approval process so that Lessor may be in a position to finalize this transaction with Lessee. Thank you for allowing us the opportunity to present this proposal.

Sincerely,

Bill Haefliger
Western States Region Manager-Water Technologies
Siemens Financial Services
Office: 626-836-4840

PROPOSAL ACCEPTED:

We hereby approve the leasing proposal as presented in the above letter. In reviewing this application, Lessor is hereby authorized to obtain and utilize such credit information as may be deemed necessary and desirable by Lessor for the analysis and the processing of this proposed transaction.

LESSEE: _____

By: _____

Name: _____

Title: _____

Date: _____

Oceanside -1,-2,-3 TCP Reduction Project

ID	Task Name	Duration	Start	Finish
1	**Project Duration**	**131 days**	**Mon 3/31/08**	**Mon 9/29/08**
2	Notice to Proceed Issued (NO LATER THAN)	0 days	Mon 3/31/08	Mon 3/31/08
3	**Submittals**	**30 days**	**Mon 3/31/08**	**Fri 5/9/08**
4	Submittal Development	20 days	Mon 3/31/08	Fri 4/25/08
5	Engineer Review	10 days	Mon 4/28/08	Fri 5/9/08
6	Submittal Approval by City	0 days	Fri 5/9/08	Fri 5/9/08
7	**Procurement, Design, Manufacture**	**86 days**	**Fri 5/9/08**	**Mon 9/8/08**
8	Procurement of Long Lead Items	0 days	Fri 5/9/08	Fri 5/9/08
9	Receipt of Long lead Items	3 days	Mon 8/11/08	Wed 8/13/08
10	Procurement of Standard Items	0 days	Fri 5/23/08	Fri 5/23/08
11	Reciept of Standard Items	5 days	Mon 7/21/08	Fri 7/25/08
12	Equipment Assembly	20 days	Thu 7/31/08	Wed 8/27/08
13	Factory Testing	6 days	Thu 8/28/08	Thu 9/4/08
14	Transportation of Equipment	2 days	Fri 9/5/08	Mon 9/8/08
15	Delivery Completion	0 days	Mon 9/8/08	Mon 9/8/08
16	**Installation**	**9 days**	**Mon 9/8/08**	**Thu 9/18/08**
17	Set Equipment/Manifolds	6 days	Mon 9/8/08	Mon 9/15/08
18	Set Panels, Run Conduit/Wire	3 days	Fri 9/12/08	Tue 9/16/08
19	Hydrotesting	2 days	Wed 9/17/08	Thu 9/18/08
20	Installation Complete	0 days	Thu 9/18/08	Thu 9/18/08
21	**Qualification and Start-up**	**7 days**	**Fri 9/19/08**	**Mon 9/29/08**
22	Sanitization and Owner Lab Confirmation	4 days	Fri 9/19/08	Wed 9/24/08
23	Load Media	2 days	Thu 9/25/08	Fri 9/26/08
24	Training	1 day	Mon 9/29/08	Mon 9/29/08
25	Sign-off	0 days	Mon 9/29/08	Mon 9/29/08

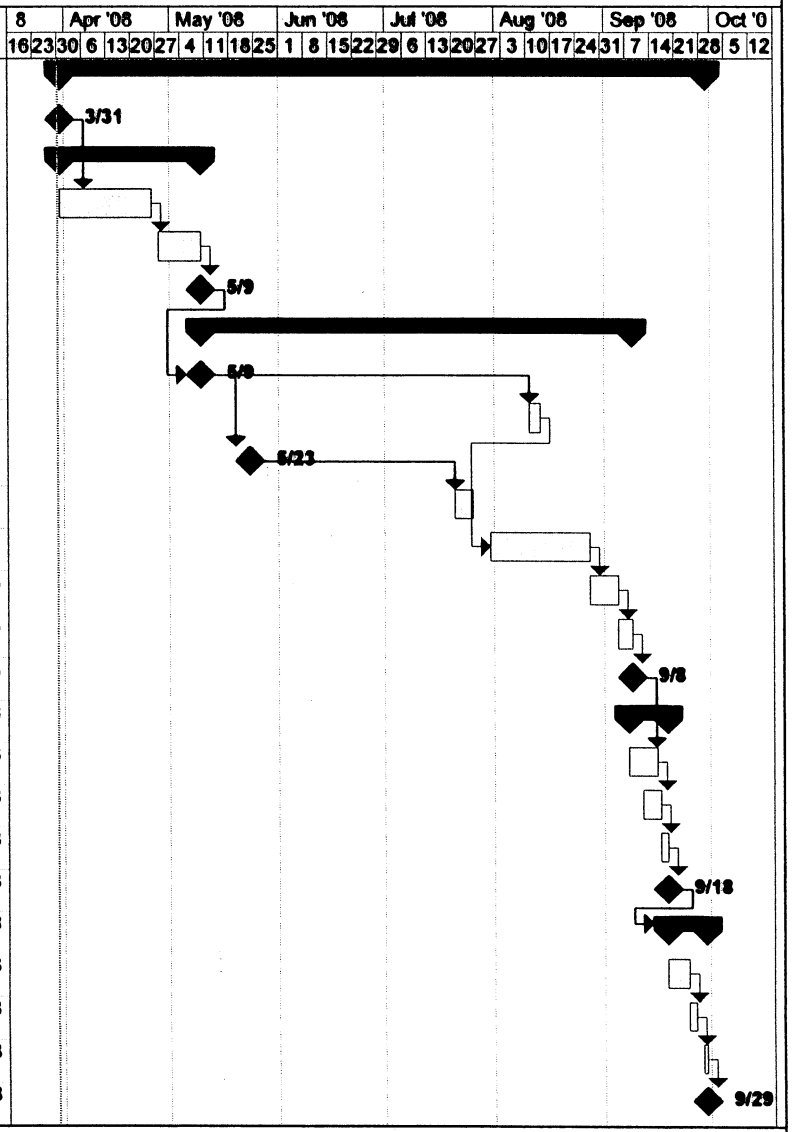

Task
Split
Progress
Milestone
Summary
Project Summary
External Tasks
External Milestone
Deadline

1,2,3 TCP REDUCTION SYSTEM, PARALLEL
(5) 12' DIA, HP1220S-SYS-125
W/20,000# AC1230C CARBON/VESSEL
LINED CARBON STEEL CONSTRUCTION

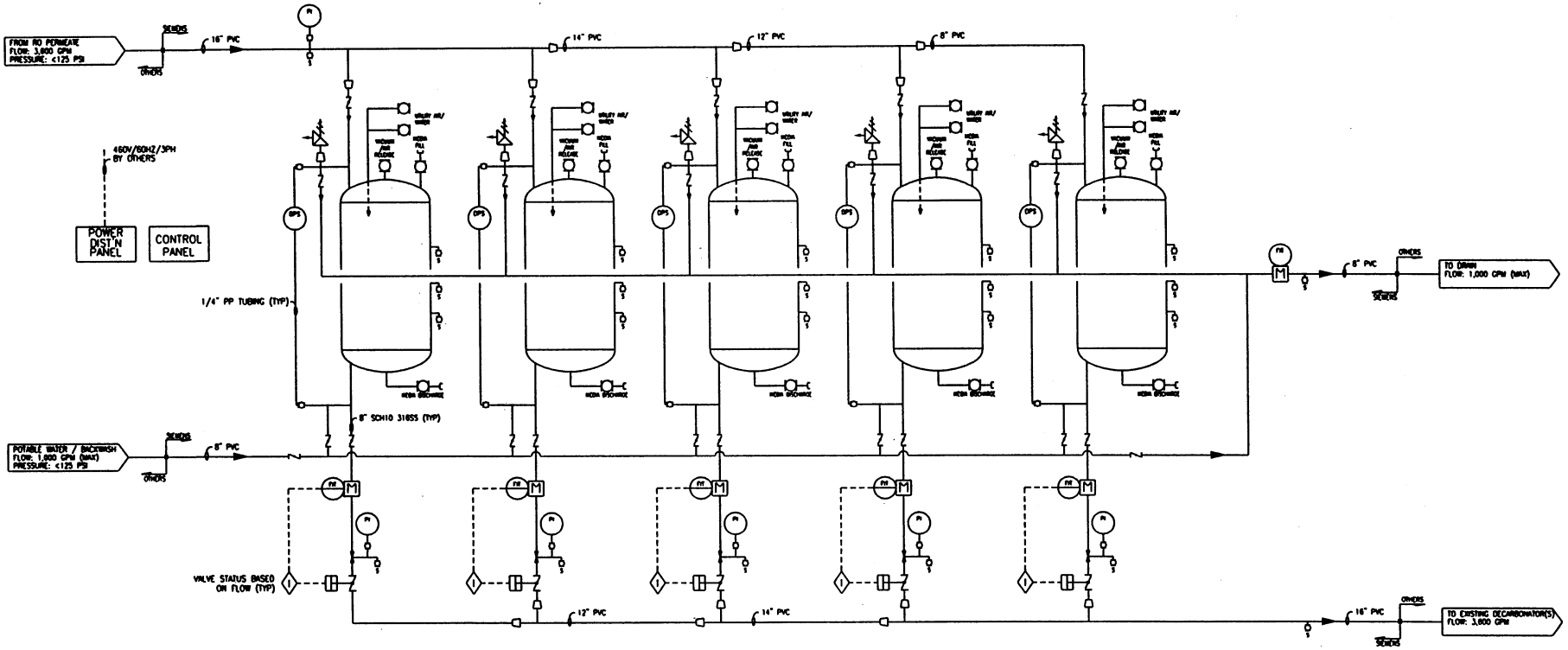

NOTES:
1. CONCRETE PAD, FENCE AND SECURITY BY OTHERS
2. FLANGED IN/OUT CONNECTIONS AT EQUIPMENT BOUNDARY BY OTHERS (REFERENCE LAYOUT)
3. 480V/60HZ/3PH POWER TO POWER DISTRIBUTION PANEL BY OTHERS
4. 4-20mA OUTPUT WIRING FROM INSTRUMENTATION TO EXISTING SCADA BY OTHERS
5. PIPE BETWEEN MANUAL BTFLY VALVES AND VESSEL TO BE SCH10 316SS
6. PIPE OUTSIDE OF BTFLY VALVES TO BE SCH80 PVC
7. OPERATION, PER SPEC: 4 ON LINE, 1 ON STANDBY

PRELIMINARY
NOT FOR CONSTRUCTION

3	GENERAL REVISIONS	11/6/97	SB
2	SEAWATER SOURCE BACKWASH PER ADDENDUM #1	11/3/97	SB
1	GENERAL REVISIONS	11/3/97	SB

DESIGNED SB 11/05/97
CHECKED DATE
DRAWN DATE
APPROVED DATE

TITLE: PROCESS FLOW DIAGRAM
1,2,3 TCP REDUCTION SYSTEM
MISSION BASIN DESALTING FACILITY

CLIENT: CITY OF OCEANSIDE
OCEANSIDE, CA

SIEMENS Water Technologies
La Verne, CA
714-226-8804 Fax: 714-521-9046

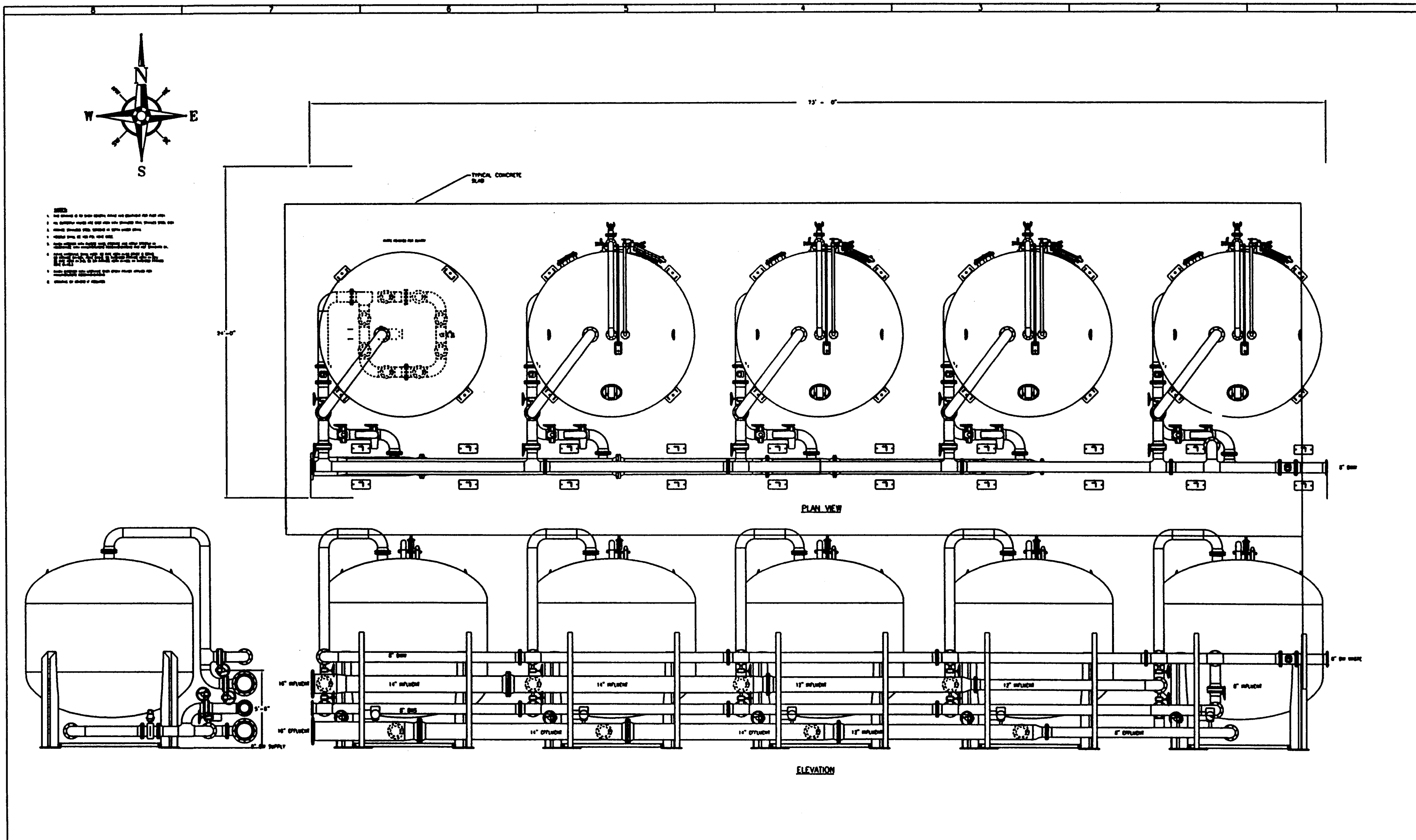

STD. BORDER-0108-24X3801 | INT'L REF: | BAR = 1" AT PLOT SCALE

REV	DESCRIPTION	DATE	DRN	CHKD	APVD	ECN

DESIGNED: LLB DATE: 11/8/07
CHECKED: DATE:
SCALE: NONE

TITLE: PRELIMINARY LAYOUT
-1,-2,-3 TCP REDUCTION [illegible]
MISSION BAY DESALTING FACILITY

PRELIMINARY
NOT FOR CONSTRUCTION

CLIENT: CITY OF OCEANSIDE
OCEANSIDE, CA

SIEMENS Water Technologies
RED BLUFF, CA

DRAWING: 071105A-02 | SHEET: 1 OF 1 | REV: 0

WESTATES AquaCarb™ 1230C
WESTATES AquaCarb™ 1230AWC

COCONUT SHELL BASED GRANULAR ACTIVATED CARBON

(FORMERLY CC-602 and CC-602AW)

COCONUT SHELL BASED GRANULAR ACTIVATED CARBONS FOR USE IN POTABLE, WASTE AND PROCESS WATER APPLICATIONS

DESCRIPTION AND APPLICATIONS

AquaCarb™ 1230C and AquaCarb™ 1230AWC are high activity coconut shell based granular activated carbons. These hard, attrition resistant high surface area carbons are designed to remove hard to adsorb organics from potable, waste and process water. They are especially effective for adsorbing chlorine, disinfection by-products, TCE, PCE, MTBE and other trace level organics. AquaCarb™ 1230AWC is acid washed yielding a very low ash content, pH neutral carbon that is ideally suited for use in potable water and high purity water systems for the microelectronics and other industries.

- ANSI/NSF Standard 61 classified for use in potable water applications
- Fully conforms to physical, performance and leachability requirements established by ANSI/AWWA B604-96 (which includes the Food Chemical Codex requirements)
- A detailed quality assurance program guarantees consistent quality from lot to lot and shipment to shipment

QUALITY CONTROL

All AquaCarb™ activated carbons are extensively quality checked at our State of California certified environmental and carbon testing laboratory located in Los Angeles, CA. USFilter's laboratory is fully equipped to provide complete quality control analyses using ASTM standard test methods in order to assure the consistent quality of all AquaCarb™ carbons.

Our technical staff offers hands-on guidance in selecting the most appropriate system, operating conditions and carbon to meet your needs. For more information, contact your nearest USFilter representative.

USFilter

DATA SHEET

WESTATES AquaCarb™ 1230C
WESTATES AquaCarb™ 1230AWC

COCONUT SHELL BASED GRANULAR ACTIVATED CARBON

(FORMERLY CC-602 and CC-602AW)

SPECIFICATIONS/TYPICAL PROPERTIES

Specification	AquaCarb™ 1230C	AquaCarb™ 1230AWC
Mesh Size	12 x 30	12 x 30
Effective Size, mm	0.6 - 0.85	0.6 - 0.85
Uniformity Coefficient	2.0 (max)	2.0 (max)
Iodine No., mgI_2/g	1100 (min)	1100 (min)
Hardness No., wt. %	98 (min)	98 (min)
Abrasion No., wt. %	85 (min)	85 (min)
Apparent Density, g/cc	0.47 - 0.52	0.47 - 0.52
Water Soluble Ash, wt. %	2.0 (max)	<0.2
Contact pH	9.0 - 10.0	6.5 - 8.0

Safety Note: Wet activated carbon readily adsorbs atmospheric oxygen. Dangerously low oxygen levels may exist in closed vessels or poorly ventilated storage areas. Workers should follow all applicable state and federal safety guidelines for entering oxygen depleted areas.

All information presented herein is believed reliable and in accordance with accepted engineering practices. USFilter makes no warranties as to the completeness of this information. Users are responsible for evaluating individual product suitability for specific applications. USFilter assumes no liability whatsoever for any special, indirect or consequential damages arising from the sale, resale or misuse of its products.

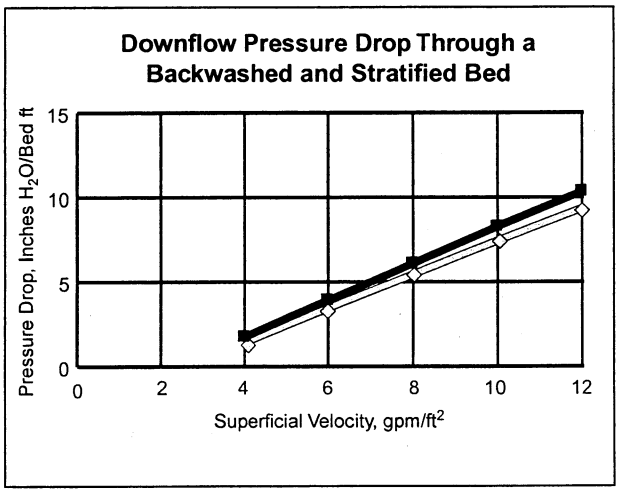

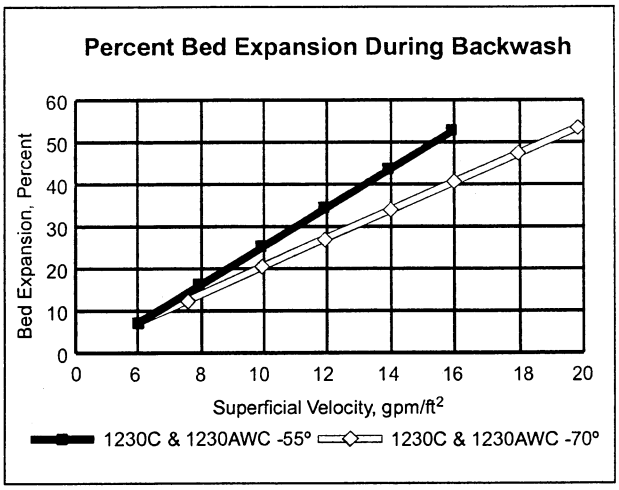

USFilter

Baytown, TX 800.659.1723
Los Angeles, CA 800.659.1771
Oakland, CA 800.659.1718
Warren, NJ 800.659.1717
www.usfwestates.com

©2001 USFilter

a VIVENDI water company

SIEMENS

REFERENCES
CONFIDENTIAL PARTIAL LIST
DRINKING WATER GAC SYSTEM OWNERS

Siemens is a recognized leader in the supply of activated carbon products and services to several industries. Siemens is highly experienced in the design, manufacture, and installation of complete carbon systems.

CITY OF SAN BERNARDINO, CALIFORNIA- URS & EPA
URS Corporation Project Management Team (916) 679-2000
Contacts: Adam Harvey- Project Manager adam harvey@urscorp.com
Dwayne Deutscher- Senior Engineer
Site location: 24 units HP1230 @ Muscoy site
Manufactured and installation of GAC system used for wellhead treatment of Chlorinated solvents.
Twelve pair of 12' diameter 30,000 lb. vessels operated in parallel/series to accommodate 15 MGD flow.

CITY OF SANGER, CALIFORNIA
Contact: Ron Yamabe (559) 244-3123 ryamabe@yandhengr.com
Site Locations: Multiple site locations
Manufactured and installation of GAC systems used for wellhead treatment of DBCP.
Eight pair of 12' diameter 20,000lb vessels operated in parallel/series to handle 10+MGD flow.

CRESTLINE-LAKE ARROWHEAD WATER AGENCY (CLAWA), CALIFORNIA
Contact: Thomas Newell (909) 338-1779
Site location: 16 units @ Silverwood
Manufactured and installation of GAC system for well head treatment of DCE.
Eight pair of 10' diameter 20,000 lb. vessels operated in parallel/series.

CITY OF CLOVIS
Contact: Lisa Koehn (559) 324-2600
Site Location: 3 Adsorbers @ Well 26
3 Adsorbers @ Well 27
4 Adsorbers @ Well 28
5 Adsorbers @ Well 36 & 37
Manufactured 12 adsorbers for wellhead treatment operating in parallel or series for DBCP removal with flow rates up to 2.1 MGD.

SIEMENS WATER TECHNOLOGIES CORP.
TERMS AND CONDTIONS OF SALE OF GOODS AND/OR SERVICES

1. **GENERAL**
The terms and conditions set forth herein together with the City of Oceanside Professional Services Agreement dated _____ constitute the sole and entire agreement between Siemens Water Technologies Corp. (hereafter referred to as the "Seller") and City of Oceanside (hereinafter referred to as the "Buyer"). Any term or condition in any order, confirmation or other document furnished by Buyer which is in any way inconsistent with or in addition to the terms and conditions hereof is hereby expressly rejected and Seller's acceptance of any offer or order of Buyer is hereby expressly made in reliance on Buyer's assent to all terms and conditions hereof. Seller's failure to object to any terms or conditions in any oral or written communication from Buyer, whether delivered before or after the date hereof, shall not constitute an acceptance thereof or a waiver of any terms or condition hereof.

2. **TERMS OF PAYMENT.**
Unless otherwise set forth in a separate leasing agreement from a Seller affiliate, all payments shall be payable net 30 days from the receipt of Seller's invoice. Buyer may be charged the lower of 1-1/2% interest per month or the maximum legal rate on all invoices not received when due and shall pay all of Seller's reasonable costs (including attorney's fees) of collecting amounts due but unpaid.

3. **SCOPE OF WORK**
Seller shall provide the goods and services as set forth in its proposal (the "Sellers Documentation") during normal business hours, unless otherwise specified in Seller's Documentation. Work requested or required by the Customer outside of these hours will be charged at Seller's then current schedule of rates including overtime charges, if applicable, and will be in addition to the charges outlined in Seller's Documentation. Where the Customer requests additional goods or services which are outside of the scope of work itemized in Seller's Documentation, Seller shall provide such goods or services at its standard fees and time and material rates and pursuant to its standard terms and conditions then in effect, unless Seller agrees otherwise in writing.

4. **CHANGES**
Seller shall not implement any changes in the scope of work described in Seller's Documentation unless Customer and Seller agree in writing to the details of the change and any resulting price, schedule or other contractual modifications. This includes any changes necessitated by a change in applicable law.

5. **TAXES**
In addition to the price specified herein, Buyer shall pay any present or future federal, state, or any other sales tax imposed by any governmental body on the sale, delivery, use or other handling applicable hereunder.

6. **TERM**
The term of this agreement shall commence on that date last executed by a party hereunder and shall continue until that time the Buyer issues Seller the notice of completion unless otherwise terminated as provided for herein or to the extent extended in writing by mutual written agreement of both Seller and Buyer. The parties acknowledge and agree that those terms and conditions which by their nature survive termination shall survive termination hereof.

7. **PRICES**
The sales price(s) for the goods and services is set forth in Seller's Documentation hereto. The cost of packing and crating in accordance with the standards of Seller is an additional charge and will be added to the sales price(s).

8. **TIME**
The parties hereto agree that actual damages from failure to meet any milestone set forth in Seller's Documentation shall be difficult to determine, and accordingly, it is agreed that liquidated damages shall be Seller's sole and exclusive remedy to Buyer for such failure. Such remedy shall not be deemed a penalty and shall apply only in instances where Seller is at fault and shall not apply to any liability or failure caused by any other party. The application of all liquidated damages applicable to Seller under this agreement shall not exceed more than $250.00 per day and $10,000.00 in the aggregate. Seller shall submit all requests for extensions of time for performance in writing to the "Water Utilities Director" no later than ten (10) calendar days after the start of the condition which purportedly caused the delay, and not later than the date on which performance is due. The Water Utilities Director shall review all such requests and shall grant reasonable time extensions for unforeseeable delays which are beyond Seller's reasonable control as provided for in Section 13, Force Majeure, below. For time periods not specified in Seller's Documentation, Seller shall respond in the most expedient and appropriate manner under the circumstances, by telephone, fax, hand delivery or mail.

9. **SHIPMENT AND TITLE PASSAGE**
(a) Title Passage for Domestic Sales: Except as otherwise expressly stated herein, all deliveries hereunder to destinations in the United States will be F>O>B> Buyer's facility at 215 Fireside Drive, Oceanside, California, via a carrier selected by Sellers. In all such cases title and risk of loss or damage will pass to Buyer upon Seller's successful completion of the system start-up, training and delivery of as built drawings, all as clarified in Seller's Documentation, but in no event more than thirty (30) days from date of delivery to Buyer's facility, unless Seller and Buyer mutually agree to any extension of time for performance in which case such thirty (30) day period shall be extended accordingly. Shipment of the goods and contract completion shall occur pursuant to the Seller's delivery milestones as provided in Seller's Documentation. Upon such successful completion of the project, Buyer will issue a notice of completion within 10 days. If shipment of any goods is delayed at Buyer's request, Seller may invoice Buyer for such goods, and risk of loss of such goods will pass to Buyer, on the date that Seller is prepared to make shipment to Buyer. Buyer shall reimburse Seller for any and all costs of storage incurred by Seller after the date that Seller is prepared to make shipment.

10. **BACK CHARGES**
Any back charges claimed by the Buyer or Buyer's Contractor for alleged corrections to the scope of work shall be accompanied by a notice as to deficiency and details of charges. Seller shall be given an opportunity to physically witness any and all alleged deficiencies for which a back charge is claimed prior to correction, and the Seller reserves the right to accept or reject any back charge claim. No back charges shall be accepted if not acknowledged in writing by Seller's on-site representative prior to correction. Any expense of an on-site consultant throughout the construction period will be borne by Buyer and/or Buyer's contractor if such expense is in excess of quantity or sums stipulated in the base bid.

11. CANCELLATION RETURNS

Neither this agreement nor any release hereunder is subject to cancellation by Buyer, nor are any goods delivered and accepted hereunder subject to return, except upon (a) written approval of Seller, and (b) the payment to Seller of a fair and equitable cancellation or return charges based upon every loss, cost or damage which Seller may suffer as a result (including overhead and other indirect costs) incurred to the date of approval of cancellation or return together with a reasonable allowance for profit, which shall be not less than fifteen percent (15%) of such costs. Seller reserves the right, by written notice of default, to cancel this order, without liability to Seller, in the event of the happening of any of the following: insolvency of Buyer, the filing of a voluntary petition in Bankruptcy by Buyer, the filing of an involuntary petition to have Buyer declared bankrupt, the appointment of a receiver or trustee for Buyer, the execution by Buyer of an assignment for the benefit of creditors, the discontinuance of business by Buyer, or the sale by Buyer of the bulk of its assets other than in the usual course of business.

12. BUYER'S CONDITION

This agreement and all shipments made hereunder shall at all times be subject to the approval by Seller of Buyer's financial condition. If the financial condition of Buyer at any time becomes unsatisfactory to Seller or if Buyer fails to make any payment when due, in addition to any other rights Seller may have, Seller may defer or decline to make any shipment or shipments here under or may condition any such shipment upon receipt of satisfactory security or cash payments in advance.

13 FORCE MAJEURE

(a) In this agreement 'force majeure' shall mean any circumstances beyond the reasonable control of Seller and Buyer that prevent or impede the carrying out of obligations under this agreement; which shall be deemed to include but shall not be limited to the following cases: any war or hostilities; any riot or civil war; any earthquake, flood, tempest, lightning or other natural physical disaster, the impossibility of the use of any railway, port, airport, shipping service; any accident, fire or explosion not caused by the negligence of the party claiming force majeure; any strike or lock-out or other industrial action affecting the performance of the contractual obligations. (b) If Seller or Buyer is prevented or delayed in the performance of any of its contractual obligations as a result of force majeure, and if the party so prevented or delayed as soon as reasonably possible gives written notice thereof to the other party specifying the matter constituting force majeure with the necessary evidence that a contractual obligation is thereby prevented or delayed, together with the further period for which it is estimated that such prevention or delay will continue, then the party so prevented shall be excused from the performance, as the case may be, of such obligation as from the date of such notice for so long as may be justified.

14. SECURITY INTEREST

Seller retains a security interest in all goods delivered hereunder and all proceeds and products thereof until all amounts due or to become due hereunder have been paid. Any repossession and removal of goods shall be without prejudice to any of Seller's other remedies at law or in equity. Buyer agrees, without further consideration, at any time to do or cause to be done, executed and delivered all such further acts and instruments (including with limitation financing statements appropriate for filing) as Seller may reasonably request in order to protect Seller's security interest.

15. SUBSTITUTIONS AND MODIFICATIONS

Seller may substitute or modify goods or services provided the substituted or modified goods or services comply with applicable specifications and any substitution or modification to the goods and services is approved in writing by the Buyer prior to the implementation of any such substitutions or modifications at Buyer's facility.

16. WARRANTY

Subject to the following sentence, Seller warrants to Buyer that the equipment goods and services shall materially conform to the description in Seller's Documentation and shall be free from defects in material and workmanship. The foregoing warranty shall not apply to the resin and goods and services that are specified or otherwise demanded by Buyer and is not manufactured or selected by Seller, as to which (i) Seller hereby assigns to Buyer third party warranties made to Seller to the extent assignable, and (ii) Seller shall have no other liability to Buyer under warranty, tort, or any other legal theory. If Buyer gives Seller prompt written notice of breach of this warranty within thirty (30) months from delivery or twenty-four (24) months from acceptance, whichever occurs first (the "Warranty Period"), Seller shall, at its sole option and as Buyer's sole remedy, repair or replace the subject parts or refund the price paid to Seller therefor. If Seller determines that any claimed breach is not in fact, covered by this warranty, Buyer shall pay Seller its then customary charges for repair or replacement made by Seller. Seller's warranty is conditioned on Buyer's (a) operating and maintaining the goods and services in accordance with Seller's instructions, (b) not making any unauthorized repairs or alterations, and (c) not being in default of any payment obligation to Seller. Seller's warranty does not cover damage caused by chemical action or abrasive material, misuse or improper installation (unless installed by Seller). THE WARRANTIES SET FORTH IN THIS SECTION ARE SELLER'S SOLE AND EXCLUSIVE WARRANTIES. SELLER MAKES NO OTHER WARRANTIES, EXPRESS OR IMPLIED, INCLUDING, WITHOUT LIMITATION, ANY WARRANTY OF MERCHANTABILITY OR FITNESS FOR PURPOSE.

17. LIMITATION ON LIABILITY

Notwithstanding anything else to the contrary, Seller's responsibility for any claims, damages, liquidated damages, losses or liabilities arising out of or related to its performance or the equipment covered hereunder, including but not limited to any correction of equipment defects under the warranty, shall not exceed the price paid to Seller therefor. IN NO EVENT SHALL SELLER OR BUYER BE LIABLE FOR ANY CONSEQUENTIAL, INCIDENTAL, SPECIAL, PUNITIVE, OR OTHER INDIRECT DAMAGES AND THE LIMITATIONS IN THIS PARAGRAPH SHALL APPLY WHETHER THE LIABILITY IS BASED ON CONTRACT, TORT, STRICT LIABILITY OR OTHER THEORY; PROVIDED, HOWEVER, THAT THE LIMTATIONS SPECIFIED IN THIS PARAGRAPH SHALL NOT APPLY TO SELLER'S INDEMNITY OBLIGATIONS UNDER PARAGRAPH 22 HEREIN.

18. ACCEPTANCE

Subject to the provisions of these Standard Terms and Conditions all goods and services delivered or rendered hereunder shall be deemed accepted by Buyer upon installation, testing, start-up and training, all to the extent set forth in Seller's Documentation and confirmation thereof in writing by the Buyer; provided, however, that acceptance shall be deemed to have occurred no later than thirty (30) days from start-up. Acceptance as aforesaid shall constitute acknowledgement of full performance by Seller of all its obligations hereunder.

19. PATENTS

Seller agrees to settle or defend any suit or proceeding brought against Buyer insofar as such suit or proceeding is based on a claim that any goods supplied by Seller to Buyer hereunder constitute direct infringement of any issued United States patent. Seller shall pay all damages and costs finally awarded therein against Buyer, provided Seller is informed by Buyer in writing within ten (10) days after receipt by Buyer and furnished a copy of each communication, notice or other action relating to the alleged infringement and is given all authority (including the right to exclusive control of the defense of any suit or proceeding) information and assistance necessary to settle or defend such suit or proceedings. In the event such goods or any part thereof, are in such suit, held to constitute infringement and the use of such goods or part thereof is enjoined, Seller shall, by its own election and at its own expense either procure for Buyer the right to continue using such goods, or part thereof, or modify them so that they become non-infringing or remove such goods, or part thereof, and grant Buyer a credit thereon and accept their return. Seller shall have the sole authority to direct the defense of and settle any indemnified claim. Seller's

indemnification is conditioned on Buyer (a) promptly notifying Seller of any claim, and (b) providing reasonable cooperation in the defense of any claim.

20. OWNERSHIP OF MATERIALS

All devices, equipment (other than the goods), designs (including drawings, plans and specifications), estimates, prices, notes, electronic data and other documents or information prepared or disclosed by Seller in connection with services provided, and all related intellectual property rights (including without limitation those associated with the goods), shall remain Seller's property. Seller grants Buyer a non-exclusive, non-transferable license to facilitate Buyer's use of the Goods supplied and the equipment serviced. Buyer shall not disclose any such material to third parties without Seller's prior written consent except as otherwise required by law, provided Buyer has provided Seller with reasonable notice thereof to allow Seller to seek a protective order or otherwise waive compliance herein.

21. PROPRIETARY INFORMATION

As used herein, the term "Proprietary Information" includes any information of a confidential or proprietary nature obtained from Seller and any information obtained from Seller which is not readily available to Seller's competitors and which, if known by a competitor of Seller, might lessen any competitive advantage of Seller or give such competitor a competitive advantage. Seller retains ownership of all Proprietary Information and all documentation which contains Proprietary Information. Except as otherwise required by law, and provided Buyer has provided Seller with reasonable notice thereof to allow Seller to seek a protective order or otherwise waive compliance herein., Buyer shall not disclose, duplicate or reproduce any Proprietary Information nor shall Buyer use any Proprietary Information other than in the course of performing its obligations hereunder. Buyer shall take all reasonable steps to prevent the disclosure, duplication or reproduction of any Proprietary Information. Notwithstanding the foregoing, Buyer shall not be required to refrain from disclosing or using any Proprietary Information which has become known to Buyer if the original source of such Proprietary Information was not Seller or any party affiliated with Seller or having a relationship of confidentiality with Seller.

22. INDEMNITY

Seller will indemnify, defend and hold Buyer harmless from any claim, cause of action or liability asserted or levied against Buyer as a result of third party claims for personal injury, death and damage to tangible property, to the extent caused by Seller's negligence. Seller shall have the sole authority to direct the defense of and settle any indemnified claim. Seller's indemnification is conditioned on Buyer (a) promptly, notifying Seller of any claim, and (b) providing reasonable cooperation in the defense of any claim.

23 BUYER-SUPPLIED DATE

Buyer acknowledges that Seller has relied upon all specifications and data supplied by Buyer (Conditions) in developing this agreement. In the event Conditions differ from those represented, Buyer assumes full responsibility for the impact of such changed Conditions.

24. LEASED EQUIPMENT

Unless otherwise provided for in any separate leasing agreement from a Seller affiliate, any leased equipment provided by Seller shall at all times be the property of Seller with the exception of certain miscellaneous installation materials purchased by the Buyer, and no right or property interest is transferred to the Buyer hereunder, except the right to use any such equipment as provided here. Buyer agrees that it shall not, nor shall it allow a third party to, pledge, lend, place a lien against, or create a security interest in, part with possession of, or relocate such equipment. Buyer agrees that it will indemnify Seller against breaches of the terms of this paragraph. Buyer shall be responsible to maintain such equipment in good and efficient working order.

UPON THE EXPIRATION OR TERMINATION OF THIS AGREEMENT, BUYER SHALL PROMPTLY MAKE ANY LEASED EQUIPMENT AVAILABLE TO SELLER FOR REMOVAL. BUYER HEREBY AGREES THAT IT SHALL GRANT SELLER ACCESS TO THE EQUIPMENT LOCATION AND SHALL PERMIT SELLER TO TAKE POSSESSION OF AND REMOVE SUCH EQUIPMENT WITHOUT RESORT TO LEGAL PROCESS AND HEREBY RELEASES SELLER FROM ANY CLAIM OR RIGHT OF ACTION FOR TRESPASS OR DAMAGES CAUSED BY REASON OF SUCH ENTRY AND REMOVAL.

25 WARNINGS

The improper installation (unless performed by Seller) or application of the goods; their use with improper wiring, piping, or ventilation; improper system design or engineering; inadequate inspection or testing; the lack of regular careful maintenance of both the goods and any equipment in connection with which the goods are used; the employment of insufficient or unqualified personnel; the lack of careful supervision, proper warnings, operating instructions, and safety precautions; the exposure of the goods to excessive heat, moisture, dust, dirt, corrosion, or any other deleterious conditions, each constitutes a hazard which can result in loss of life, serious personal injury, heavy property or business damages, and Buyer agrees with Seller to itself take and require others to take all reasonable measures to avoid each such hazard. Buyer agrees to notify its customers or users of the product(s), as the case may be, of these warnings, and to deliver to its customers or users of the product(s) all written warnings provided with each product by Seller. Additional copies of written warnings are available upon request.

26. RESERVED

27. NON-WAIVER OF DEFAULT

No failure by Seller to insist on strict performance of any term or condition hereof shall constitute a waiver of such terms or conditions or any breach thereof, nor shall such failure in any way affect Seller's legal remedies with respect to any default by Buyer hereunder.

28. ASSIGNMENT

Buyer may not transfer or assign this agreement or any interest herein by operation of law or otherwise, without the prior express written consent of Seller and any attempted transfer or assignment of this agreement or any rights or duties hereunder without such consent shall be void. Seller may assign its rights and delegate its duties hereunder.

29. CONTROLLING LAW

This agreement shall be controlled by the laws of the State of California. If any provision hereof is deemed or declared to be invalid or unenforceable, all other terms and provisions shall remain in full force and effect.

30. ENTIRE AGREEMENT

(a) This agreement supersedes all prior written and oral agreements and understandings between Seller and Buyer with respect to the goods and services specified herein. No representation or statement not contained herein shall be binding upon Seller as a warranty or otherwise. No addition to or waiver, modification, or cancellation of any provision hereof shall be binding upon Seller unless in writing and signed by a duly authorized representative of Seller.

(b) No purchase order shall be binding until acknowledged in writing by Seller. Orders, or other documents, submitted by Buyer modifying, adding to, or inconsistent with the terms and provisions herein contained, shall be deemed accepted by Seller only on the condition that the rights of the parties shall be determined solely by the terms and conditions above set out, and in consummating any such order, Seller shall be deemed not to have enlarged, modified, or changed its liabilities or obligations as above set out. Acceptance of the goods shall constitute conclusive acceptance of these terms and conditions.

31. NOTICES

All notices and other communications hereunder shall be in writing and shall be mailed by first class registered or certified mail, postage prepaid to the parties hereto at their respective addresses set forth in the order of purchase subject to the right of either party to change such

address upon then (10) days prior written notice and shall be deemed to have been received ten (10) days after the mailer if both Buyer and Seller are located in the United States and twenty-one (21) days if Buyer or Seller is located outside the United Sates.

32. ATTORNEY'S FEES

In any action or proceeding to enforce the terms of this agreement, the prevailing party shall be entitled to recover its actual and reasonable attorney's fees and investigatory, court and other costs incurred in connection with such action or proceeding.

IN WITNESS WHEREOF, the parties hereto for themselves, their heirs, executors, administrators, successors and assigns do hereby agree to the full performance of the covenants herein contained and have caused these terms and conditions to be executed by setting hereunto their signatures:

SIEMENS WATER TECHNOLOGIES CORP.

By: _____

Name/Title: ~~[illegible]~~ HILLIER / VICE PRESIDENT

By: _____

Name/Title Peter J. Davis, Secretary

CITY OF OCEANSIDE

By: _____

Approved as to Form:

_____

BARBARA L. HAMILTON
ASSISTANT CITY ATTORNEY

SIEMENS

February 28, 2008

City of Oceanside
300 North Coast Highway,
Oceanside CA 92054
Attention: Mr. Jason Dafforn

Subject: Master Equipment Lease Agreement dated **& Leasing**
Schedule # 449-0053289-001

Dear Mr. Dafforn

Enclosed please find a documentation package prepared at the request of William Haefliger your Siemens Financial Services, Inc representative, for the financing of the Five (5) Siemens Water Technologies HP1220ST-125 Liquid Phase Adsorbers and ancillary equipment as more fully described on the attached Exhibit A.

Please have these documents reviewed and executed by an authorized signatory where indicated and return them to my attention. Also required is a Legal Opinion, in form and substance acceptable to Siemens Financial Services, as well as evidence of all required municipal approvals (i.e., Board resolution). It would be greatly appreciated if you could return the signed documents within 10 business days.

Also, I have included a Delivery & Acceptance Certificate, which should not be executed and dated until the equipment has been delivered.

For your convenience, we have enclosed a prepaid FedEx envelop for your use. To arrange for package pick up you may call (800) 238-5355.

If you are a tax-exempt entity, please provide me with a copy of your exemption certificate so that we may record it with our Tax Department.

Upon Acceptance of this transaction by Siemens Financial Services, Inc., you will be sent a fully executed copy for your files.

Thank you for your assistance with this transaction. If you have any questions, please call William Haefliger at or myself at (800) 327-4443 extension 3402.

Sincerely,

Julianne Butler-Sterk
Senior Transaction Coordinator

Enclosures

Siemens Financial Services, Inc.

170 Wood Avenue South
Iselin, NJ 08830

Tel: (732) 590-6500
(800) 327-4443

www.siemensfinnancial.com

SIEMENS

Siemens Financial Services, Inc.

MASTER EQUIPMENT LEASE AGREEMENT

Dated: _____

LESSOR: **SIEMENS FINANCIAL SERVICES, INC.**
170 Wood Avenue South
Iselin, NJ 08830
(800) 327-4443

LESSEE: **City of Oceanside**
(herein "Lessee")
300 North Coast Highway
(Address)
Oceanside, CA 92054
(City, State, Zip)

TERMS AND CONDITIONS OF AGREEMENT

1. MASTER LEASE: This Master Equipment Lease Agreement (herein "Agreement") sets forth the basic terms and conditions upon which Lessor shall lease to Lessee and Lessee shall lease from Lessor items of property specified in leasing schedules (herein "Leasing Schedules") to be entered into from time to time. Each Leasing Schedule shall incorporate the terms and conditions of the Agreement and shall constitute a lease as to the property specified in such Leasing Schedule (herein "Equipment"). The term "Lease" as used in the Agreement shall mean the applicable Leasing Schedule as incorporating the terms and conditions of the Agreement. The Agreement shall become effective at the time of Lessor's acceptance (by execution hereof) at its corporate offices, by an authorized representative of Lessor.

2. TERM AND LEASE PAYMENTS: The lease term of the Equipment shall be for the period specified in the Leasing Schedule (herein "Lease Term"). The Lease Term shall commence upon the commencement date specified in the Leasing Schedule (herein "Commencement Date"). For the Lease Term, Lessee agrees to pay to Lessor the number of lease payments specified in the Leasing Schedule, each in the amount specified in the Leasing Schedule (herein "Lease Payments") for the payment periods specified in the Leasing Schedule (herein "Payment Periods"), including any Advance Lease Payments specified in the Leasing Schedule, with the first Lease Payment being due on the date set forth on the Leasing Schedule ("First Regular Payment Date"), and the remaining Lease Payments on the same day of each consecutive Payment Period thereafter for the duration of the Lease Term (except that any Lease Payment due on a date that does not exist in a particular month, shall be due on the last day of such month). If Interim Rent is applicable, then in addition to the foregoing, for the period from the Commencement Date to (but excluding) the first day of the month immediately following the Commencement Date ("Interim Period"), Lessee shall pay to Lessor Interim Rent in the amount set forth in the Leasing Schedule and such amount shall be due and payable on the tenth day following the Commencement Date (and the Stipulated Loss Value Schedule to the Lease, if any, shall be construed so that Payment #1 under such schedule shall also include the Interim Period). Any Advance Lease Payments (unless otherwise specified in the Leasing Schedule) will be applied upon the effective date of the Lease to the first regular Lease Payment, then to the remaining Lease Payments in reverse order. Lessee agrees to pay on demand, as a late charge, 1.3% per month, limited by the maximum rate permitted by law, of each overdue amount (including accelerated balances) under the Lease, whether such amount is due prior to or after a Default (as hereinafter defined). All payments provided for in the Lease shall be payable at the office of Lessor set forth above, or at any other place designated by Lessor. The Lease is a net lease and Lessee shall not be entitled to any abatement of, reduction of, or setoff against Lease Payments for any reason whatsoever. The Lease may not be terminated or canceled for any reason whatsoever, except as expressly provided in the Lease. No amounts under the Lease may be prepaid.

(CONTINUED ON FOLLOWING PAGES)

IN WITNESS WHEREOF, the parties hereto have duly executed the Agreement as set forth below. Lessee acknowledges that no amendment to any Leasing Schedule or the Agreement shall be effective unless in writing signed by the parties hereto.

BY EXECUTION HEREOF, THE SIGNER CERTIFIES THAT (S)HE HAS READ THE ENTIRE AGREEMENT, THAT LESSOR OR ITS REPRESENTATIVES HAVE MADE NO AGREEMENTS OR REPRESENTATIONS EXCEPT AS SET FORTH HEREIN OR IN THE LEASING SCHEDULE AND THAT (S)HE IS DULY AUTHORIZED TO EXECUTE THE AGREEMENT ON BEHALF OF LESSEE.

ACCEPTED BY:

LESSOR : SIEMENS FINANCIAL SERVICES, INC.

BY: _____
(Authorized Signature)

NAME: _____
(Printed or Typed)

TITLE: _____

DATE: _____

LESSEE: City of Oceanside

BY: _____
(Authorized Signature)

NAME: _____
(Printed or Typed)

TITLE: _____

DATE: _____

APPROVED AS TO FORM
OCEANSIDE CITY ATTORNEY
BARBARA L. HAMILTON
Assistant City Attorney

3. DISCLAIMER OF WARRANTIES; LIMITATION OF REMEDY; LIMITATION OF LIABILITY: Lessee has selected both the Equipment and the supplier (identified in the Leasing Schedule, herein "Supplier") from whom Lessee has requested that Lessor purchase the Equipment. **LESSEE ACKNOWLEDGES THAT LESSOR HAS NO SPECIAL FAMILIARITY OR EXPERTISE WITH RESPECT TO THE EQUIPMENT. LESSEE AGREES THAT THE EQUIPMENT LEASED UNDER THE LEASE IS LEASED "AS IS" AND IS OF A SIZE, DESIGN AND CAPACITY SELECTED BY LESSEE AND THAT LESSEE IS SATISFIED THAT THE SAME IS SUITABLE FOR LESSEE'S PURPOSES, AND THAT EXCEPT AS MAY OTHERWISE BE SPECIFICALLY PROVIDED HEREIN OR IN THE LEASING SCHEDULE, LESSOR HAS MADE NO REPRESENTATION OR WARRANTY AS TO ANY MATTER WHATSOEVER. LESSOR DISCLAIMS, AND LESSEE HEREBY EXPRESSLY WAIVES AS TO LESSOR, ALL WARRANTIES WITH RESPECT TO THE EQUIPMENT INCLUDING BUT NOT LIMITED TO ALL EXPRESS OR IMPLIED WARRANTIES OF MERCHANTABILITY AND FITNESS FOR A PARTICULAR PURPOSE, QUALITY, CAPACITY, OR WORKMANSHIP, ALL EXPRESS OR IMPLIED WARRANTIES AGAINST PATENT INFRINGEMENTS OR DEFECTS, WHETHER HIDDEN OR APPARENT, AND ALL EXPRESS OR IMPLIED WARRANTIES WITH RESPECT TO COMPLIANCE OF THE EQUIPMENT WITH THE REQUIREMENTS OF ANY LAW, REGULATION, SPECIFICATION OR CONTRACT RELATIVE THERETO. IN NO EVENT SHALL LESSOR BE LIABLE (INCLUDING WITHOUT LIMITATION, UNDER ANY THEORY IN TORTS) FOR ANY LOSS OF USE, REVENUE, ANTICIPATED PROFITS OR SPECIAL, INDIRECT, INCIDENTAL OR CONSEQUENTIAL DAMAGES ARISING OUT OF OR IN CONNECTION WITH THE LEASE OR THE USE, PERFORMANCE OR MAINTENANCE OF THE EQUIPMENT.** Nothing contained in the foregoing disclaimer is intended to diminish the right of the Lessee, consistent with the provisions of this Section, to exercise all rights and remedies against the Supplier, manufacturer or service provider of the Equipment for all representations, warranties and commitments made by such party to the Lessee; provided, however, that the exercise of any rights against the Supplier, manufacturer and/or service company shall not alter, amend, abrogate, nullify, supersede, suspend, diminish or otherwise affect any of the obligations of Lessee hereunder. If the Equipment is not properly installed, does not operate as represented or warranted by the Supplier, manufacturer and/or service company or is unsatisfactory for any reason, Lessee shall make any claim on account thereof solely against the Supplier, manufacturer and/or service company and shall, nevertheless, pay Lessor all amounts payable under the Lease and shall not set up against Lessee's obligations any such claims as a defense, counterclaim, recoupment, deduction, setoff or otherwise. For the Lease Term, for so long as no Default has occurred and is continuing, Lessor assigns to Lessee (to the extent permitted by law) any right Lessor may have under a Supply Contract (as defined in the Leasing Schedule) against the Supplier, manufacturer and/or service company to enforce, at Lessee's expense (if any), any product warranties with respect to the Equipment, provided however, that Lessee shall indemnify and defend Lessor (and its assigns) from and against all claims, expenses, damages, losses and liabilities incurred or suffered by Lessor in connection with any such action taken. **TO THE EXTENT PERMITTED BY APPLICABLE LAW, LESSEE WAIVES ANY AND ALL RIGHTS AND REMEDIES CONFERRED UPON A LESSEE BY ARTICLE 2A OF THE UNIFORM COMMERCIAL CODE (INCLUDING, BUT NOT LIMITED TO, LESSEE'S RIGHTS, CLAIMS AND DEFENSES UNDER ARTICLE 2A OF THE UNIFORM COMMERCIAL CODE, SECTIONS 401, 402, 508-522) AND ANY RIGHTS NOW OR HEREAFTER CONFERRED BY STATUTE OR OTHERWISE THAT MAY LIMIT OR MODIFY LESSOR'S RIGHTS AS DESCRIBED IN THE LEASE.**

4. TITLE; IDENTIFICATION; PERSONAL PROPERTY: Lessee acknowledges that subject to the provisions of Section 12 of the Leasing Schedule, title to the Equipment shall at all times be vested in Lessor, and no right, title or interest in the Equipment shall pass to Lessee other than, conditioned upon Lessee's compliance with and fulfillment of the terms and conditions of the Lease, the right to possess and use the Equipment for the full Lease Term. Lessee agrees not to sell, assign, sublet, pledge, or otherwise encumber any interest in the Lease or the Equipment and agrees to keep the same free from any lien, encumbrance, right of distraint or any other claim which may be asserted by any third party. Lessee shall immediately notify Lessor in writing of any tax or other liens attaching to the Equipment. Lessor may require plates or markings to be affixed to or placed on the Equipment indicating Lessor's interest. Lessor and Lessee hereby confirm their intent that the Equipment always remain and be deemed personal property even though the Equipment may hereafter become attached or affixed to realty. Lessee shall obtain all such waivers as Lessor may reasonably require to acknowledge Lessor's title to and assure Lessor's right to remove the Equipment, including any landlord and mortgagee waivers.

5. PAYMENT OF TAXES; GENERAL INDEMNIFICATION: Lessee shall pay promptly to Lessor when due, all taxes, fees and assessments, including but not limited to, all license and registration fees, sales, use, property, gross receipts, excise, transaction, ad valorem, privilege, intangible, stamp or other taxes or charges, together with any fines, penalties or interest thereon (unless such fines, penalties or interest arise solely from Lessor's gross negligence or willful misconduct) now or hereafter imposed by any governmental body, upon or with respect to, any of the Equipment or the use, possession, ownership, leasing, operation, delivery or return thereof (excluding, however, franchise taxes and any taxes based on the net income of Lessor). Any fees, taxes or other amounts paid by Lessor upon failure of Lessee to make such payments set forth in this Section 5 shall be payable upon demand from Lessee to Lessor. Lessee agrees to indemnify and hold Lessor (and its assigns) harmless from and against any and all claims, losses, damages, penalties, actions, suits and liabilities (including negligence, tort and strict liability), together with all reasonable legal costs and expenses in connection therewith incurred by Lessor (and its assigns) which result from, or relate to, the manufacture, purchase, ownership, maintenance, modification, delivery, installation, possession, condition, use, acceptance, rejection, revocation of acceptance, operation or return of the Equipment.

6. INSTALLATION AND DELIVERY: Lessee shall provide a suitable installation environment for the Equipment as specified in the applicable manufacturer's or Supplier's manuals, and except as otherwise specified by the manufacturer or Supplier, furnish all labor required for unpacking and placing each item of Equipment in the desired location. Lessee shall also be responsible for any delivery, rigging, destination and installation charges charged by the manufacturer or Supplier with respect to the Equipment.

7. OPERATION; USE; INSPECTION: For the full Lease Term, Lessee shall operate the Equipment in accordance with all applicable manufacturer and Supplier manuals or instructions by fully qualified and duly authorized personnel only, in accordance with all applicable laws and regulations. For said Lease Term, Lessee shall properly maintain the Equipment, or cause it to be properly maintained, by a fully qualified service company, and shall immediately notify Lessor in writing of the entity maintaining the Equipment and of any change of such entity. Such maintenance shall be performed in accordance with all requirements necessary to enforce all product warranty rights. All operating and maintenance costs with respect to the Equipment shall be borne by Lessee. Lessee shall not: (a) use, operate or locate the Equipment in any manner or area so as to cause it to be excluded from coverage by any insurance required under the Lease; (b) abandon the Equipment or, without prior written notice to Lessor, take the Equipment out of use; (c) alter the Equipment; (d) permit the Equipment to be removed from the equipment location specified in the Leasing Schedule (herein "Equipment Location"), or any subsequent location, without the prior written consent of Lessor, which consent shall not be unreasonably withheld; or (e) without the prior written consent of Lessor, affix or install any accessory, equipment or device on any item of Equipment if such (i) is not readily removable, or (ii) will impair the value or the originally intended function or use of such Equipment. All additions, repairs, parts, accessories, equipment and devices attached or affixed to any item of Equipment which are not readily removable, shall become the property of Lessor and part of the Equipment for all purposes hereof. Lessor shall have the right from time to time during normal business hours to enter upon the Equipment Location or elsewhere for the purpose of confirming the existence, condition or proper maintenance of the Equipment.

8. RISK OF LOSS; INSURANCE: (a) Lessee agrees that it shall bear all risk of loss, damage to or destruction of the Equipment. Lessee shall give Lessor prompt notice of any damage to or loss of any Equipment or of any occurrence arising from the possession, use or operation of the Equipment resulting in death or bodily injury, or damage to property. In the event of damage to any item(s) of Equipment, Lessee shall immediately place such item(s) in good repair (with no abatement of Lease Payments), with the proceeds of any insurance recovery applied to the cost of such repair. Should any item(s) of Equipment become lost, stolen, destroyed, worn out, damaged beyond repair, condemned, confiscated, seized or requisitioned (herein "Event of Loss"), Lessee shall, at the option of Lessor, either (i) replace the same with like equipment in good repair (with no abatement of Lease Payments) and ensure that Lessor acquires good title to such replacement equipment or execute any documents or instruments requested by Lessor in order to ensure a valid, perfected and enforceable first priority security interest in such replacement equipment, or (ii) in the event Option A of Section 12 of the applicable Leasing Schedule has been selected ("Option A"), pay to Lessor on the date of the scheduled Lease Payment immediately following such Event of Loss (herein "Loss Payment Date"), the pro rata portion relating to such item(s) of the greater of (A) the remaining Lease Payments for the balance of the Lease Term (calculated as of the Loss Payment Date), plus Lessor's estimated residual interest in the Equipment, such sum discounted at a per annum rate of five percent (5%), or (B) the stipulated loss value of the Equipment as set

Initials: _____
Customer Initials

forth in the schedule to the Lease and made a part thereof ("Stipulated Loss Value") calculated for the Payment Period immediately following the Loss Payment Date; plus in either case all past due and unpaid Lease Payments and other payments due and unpaid through the Loss Payment Date relating to such item(s), whereupon the Lease shall terminate as to such item(s) and Lessor shall adjust the remaining Lease Payments and Stipulated Loss Value Schedule accordingly; or if Option B or Option C of Section 12 of the applicable Leasing Schedule has been selected ("Option B" or "Option C", as applicable), pay to Lessor on the date of the scheduled Lease Payment immediately following such Event of Loss, the pro rata portion relating to such item(s) of the sum of (A) the remaining Lease Payments for the balance of the Lease Term and (B) the purchase option price specified in Option B or Option C, as applicable (herein "Purchase Option Price"), such sum discounted at the per annum rate implicit in the Lease assuming exercise by Lessee of such purchase option (herein "Lease Rate"), plus all past due and unpaid Lease Payments and any other payments due and unpaid through the Loss Payment Date relating to such item(s), whereupon the Lease shall terminate as to such item(s) and Lessor shall adjust the remaining Lease Payments and Purchase Option Price accordingly.

(b) For the full Lease Term, Lessee, at its expense, shall maintain comprehensive general liability insurance and "all risks" property insurance with respect to the Equipment (as primary insurance for Lessee and Lessor), both in such amounts as Lessor shall require, except that such property insurance shall be in an amount at least equal to the full replacement value of the Equipment or, if Option A was selected, the applicable Stipulated Loss Value thereof, if greater; and such insurance shall be placed with carriers acceptable to Lessor. The liability insurance policy shall name Lessor (and its successors and assigns) as additional insured and the property insurance policy shall name Lessor (and its successors and assigns) as loss payee to the extent its interest may appear, and both policies shall provide that they may not be canceled or altered without at least thirty (30) days prior written notice to Lessor. Lessee irrevocably appoints Lessor its agent and attorney-in-fact for the purpose of adjusting and settling any property insurance hereunder and endorsing in Lessee's name any instruments or payments received in respect thereof. Lessee shall furnish to Lessor within thirty (30) days (or sooner if requested by Lessor) of delivery of the Equipment, a certificate of insurance that such coverage is in effect, however, Lessor shall be under no duty either to ascertain the existence of or to examine such insurance policies or to advise Lessee in the event that such insurance coverage does not comply with the requirements hereof.

9. DEFAULT AND REMEDIES: (a) Any one or more of the following shall constitute a default by Lessee under the Lease (herein "Default"): (i) failure by Lessee to pay any amounts under the Lease when due and such remains unremedied for a period of ten (10) days from the due date thereof; or (ii) (A) failure by Lessee to maintain any insurance required under the Lease; or (B) failure by Lessee to comply with any other provisions or perform any of its other obligations arising under the Lease or under any other documents or agreements relating to the Lease, and such remains unremedied by Lessee for a period of twenty (20) days; or (iii) any representations or warranties made or given by Lessee or any guarantor of any of Lessee's obligations under the Lease (herein "Guarantor") in connection with the Lease or the Agreement, or any other document or agreement relating to the Lease or the Agreement (including any applicable guaranty), were false or misleading in a material respect when made; or (iv) subjection of the Equipment to levy or execution or other judicial process which is not or cannot be removed within thirty (30) days from the subjection thereof, or the imposition of any unauthorized lien on or transfer of the Equipment by or through Lessee; or (v) commencement of any insolvency, bankruptcy or similar proceedings by or against Lessee or Guarantor (each, an "Obligor"), including any assignment by an Obligor for the benefit of creditors, and in the case of any such involuntary proceedings, such is not dismissed within thirty (30) days of institution, or the inability of an Obligor to generally pay its debts as they become due, or the appointment of a receiver, trustee or similar official for an Obligor or any of its respective property; or (vi) any material adverse change from the date of the Leasing Schedule in an Obligor's business operations or financial condition, or any act of an Obligor which imperils the value of the Equipment or the prospect of full performance of an Obligor's obligations under the Lease or any applicable guaranty, including but not limited to the liquidation or dissolution of an Obligor or the commencement of any acts relative thereto, or without the prior written consent of Lessor, any sale or other disposition of all or substantially all of the assets of an Obligor, or any merger or consolidation of an Obligor unless such Obligor is the surviving entity and such Obligor's tangible net worth, after giving effect to such transaction, equals or exceeds that which existed prior hereto, or the cessation of business by an Obligor; or (vii) a default by an Obligor under any Lease, guaranty or other agreement or note with Lessor, or with any assignee of the Lease, or under any agreement with any other party that in Lessor's sole opinion is a material agreement; or (viii) the death of an Obligor, the withdrawal of any partner of an Obligor if such Obligor is a partnership, the withdrawal of any member of an Obligor if such Obligor is a limited liability company, or the inability of an Obligor to perform any of its respective obligations contained in the Lease or in any applicable guaranty.

(b) Upon the occurrence of any Default, Lessor may exercise any one or more of the following remedies (which remedies shall be cumulative, and may be exercised simultaneously, in each case to the extent permitted by law): (i) cancel or terminate the Lease and/or any unfunded commitments or proposals to Lessee, whether related to the Lease or otherwise; (ii) secure peaceable repossession and removal of the Equipment by Lessor or its agent without judicial process; (iii) demand and Lessee shall return the Equipment to Lessor in accordance with Section 11 hereof; (iv) sell, lease or otherwise dispose of the Equipment at public or private sale without advertisement or notice except that required by law, upon such terms and at such place as Lessor may deem advisable, and Lessor may be the purchaser at any such sale (if any such notice is required, Lessor and Lessee agree that ten (10) days notice shall be deemed to be commercially reasonable); (v) demand and Lessee shall pay all expenses in connection with the Equipment relating to its retaking, refurbishing, selling, leasing or the like; and (vi) exercise any other right or remedy which may be available to it under the Uniform Commercial Code ("UCC") or any other applicable law. To the extent permitted by applicable law, Lessee waives all rights it may have to limit or modify any of Lessor's rights and remedies hereunder, including but not limited to, any right of Lessee to require Lessor to dispose of or marshal the Equipment or otherwise mitigate its damages hereunder.

(c) If Option A has been selected, Lessor may exercise the following remedy, as provided herein, in addition to the remedies set forth in Section 9 (b) above (which remedies shall be cumulative, and may be exercised simultaneously, in each case to the extent permitted by law): By notice to Lessee, as liquidated damages for loss of a bargain and not as a penalty, declare the Stipulated Loss Value of the Equipment calculated for the Payment Period immediately following the date of such notice immediately due and payable, together with (i) all past due and unpaid Lease Payments through such Payment Period, and (ii) all other amounts due and unpaid under the Lease (including late charges), whereupon such shall become immediately due and payable. In the event, however, that no Stipulated Loss Value Schedule was included in the transaction, Lessor may, alternatively, declare all remaining Lease Payments for the balance of the Lease Term discounted at a per annum rate of five percent (5%), together with any loss or damage to Lessor's residual interest in the Equipment pursuant to Section 2A-532 of the UCC, plus all past due and unpaid Lease Payments and all other amounts due and unpaid under the Lease (including late charges), immediately due and payable in full, whereupon such shall become immediately due and payable.

(d) If Option B or Option C has been selected, Lessor may exercise the following remedy in addition to the remedies set forth in Section 9(b) above (which remedies shall be cumulative, and may be exercised simultaneously, in each case to the extent permitted by law): Lessor may declare all remaining Lease Payments for the balance of the Lease Term plus the Purchase Option Price, such sum discounted at the Lease Rate, plus all past due and unpaid Lease Payments and all other amounts due and unpaid under the Lease (including late charges), immediately due and payable in full, whereupon such shall become immediately due and payable.

10. QUIET ENJOYMENT: So long as no Default exists, Lessor (and any assignee shall be deemed to have warranted that it) shall not interfere with Lessee's quiet enjoyment of the Equipment.

11. RETURN OF EQUIPMENT; EXTENSION OF TERM: Upon the end of the Lease Term or any extension thereof (unless Lessee has purchased the Equipment pursuant to the terms of the Lease), or upon demand of Lessor pursuant to Section 9 hereof, Lessee, at its own risk and expense, shall immediately return the Equipment to Lessor, free of all liens and encumbrances created by or through Lessee, in compliance with all legal and regulatory requirements, de-installed and packed for shipment (by Supplier or a qualified service company) in accordance with manufacturer's specifications, in the same condition and appearance as when received by Lessee (ordinary wear and tear excepted) and in good working order and eligible for manufacturer's maintenance (if available), along with original user manuals and documentation, freight prepaid and insured, to such location within the continental United States as Lessor shall designate. Should Lessee fail to (i) provide timely notice of exercise as provided in Option A or Option B, or (ii) provide Lessor, at least one hundred and twenty (120) but not more than one hundred and eighty (180) days prior to the proposed return date, with written notice of its election to return the Equipment, or (iii) return the Equipment to Lessor in the time and manner provided above, then the Lease Term shall be extended for successive one hundred and twenty (120) day periods until Lessee provides such notice and returns the Equipment to Lessor in accordance herewith, or Lessor terminates the Lease by ten (10) days written notice to Lessee. In the event the Lease is extended pursuant to the preceding sen-

Initials: _____
Customer Initials

tence, the periodic Lease Payments and the Stipulated Loss Value (if any) in effect prior to the expiration of the Lease Term, and all other provisions of the Lease, shall continue to apply.

12. LESSEE REPRESENTATIONS AND COVENANTS: Lessee represents and covenants that: (a) it is duly and solely organized, validly existing and in good standing under the laws of its state of organization; (b) the execution, delivery and performance by Lessee of the Lease and all other related instruments and documents will not violate any governmental statute or regulation, or conflict with or result in any breach, default or violation of the organizational documents of Lessee or any judgment, order or decree to which Lessee or its property is subject; (c) the execution, delivery and performance by Lessee of the Lease and all other related instruments and documents have been duly authorized by all necessary organizational action; (d) Lessee shall furnish Lessor with (and cause any Guarantor to furnish) its annual and such interim financial statements as Lessor shall request, certified and audited (if available), together with officer's certificates, opinions of counsel, resolutions and such other information and documents as Lessor may reasonably request; (e) all financial statements and other related financial information furnished by Lessee or any Guarantor shall be prepared in accordance with generally accepted accounting principles consistently applied and shall fairly present, in all material respects, Lessee's and any Guarantor's financial position and results of its operations as of the dates given on such statements; (f) the Lease and all other related instruments or documents hereunder and thereunder are enforceable in accordance with their terms, shall be effective against all creditors of Lessee under applicable law, including fraudulent conveyance and bulk transfer laws, and shall raise no presumption of fraud; all information set forth on the Leasing Schedule is true and complete; and all information (taken as a whole) furnished by or on behalf of Lessee (including, without limitation, by any Guarantor) in connection with any Lease, whether before or after the date of such Lease, is, and shall be, true and accurate in all material respects on the date such information is dated or certified and not incomplete by omitting to state any fact necessary to make such information (taken as a whole) not misleading in any material respect; (g) there are no pending or threatened actions or proceedings before any court, administrative agency or other dispute resolution forum that could have a material adverse effect on Lessee, the Lease or any other related instruments or documents or the transactions thereunder, unless such actions have been previously disclosed to Lessor and consented to in writing by Lessor; (h) the Lease does not evidence a consumer transaction and all Equipment is leased for business purposes only, and not for personal, family or household purposes, and only for its normally intended purpose; (i) all Equipment is and shall at all times be and remain tangible personal property and shall not become a fixture or real property; (j) Lessee shall immediately notify Lessor in writing upon the occurrence of any Default or event which, with the lapse of time or giving of notice, would constitute a Default; and (k) Lessee shall provide Lessor with written notice at least thirty (30) days prior to changing its legal name, address, identity, state of organization, organizational structure, organizational identification number (if applicable) or social security or taxpayer identification number (as applicable). Lessee shall promptly execute and deliver to Lessor such further documents and take such further action as Lessor may reasonably request in order to more effectively carry out the intent and purpose of the Lease.

13. NOTICES; CHANGES; FILINGS: Notices, requests or other communications required under the Lease to be sent to either party shall be in writing and shall be (a) by United States first class mail, postage prepaid, and addressed to the other party at the address specified above (or to such other address as such party shall have designated by proper notice), (b) by personal delivery or (c) by overnight delivery by a nationally recognized courier. Lessee authorizes Lessor to fill in descriptive material in the Lease (including serial numbers) and to correct any patent errors in the Lease. Lessee (i) authorizes Lessor to file both before and/or after a Leasing Schedule is executed by Lessee (and Lessee shall execute if requested by Lessor) and (ii) irrevocably appoints Lessor its agent and attorney-in-fact to execute in the name of Lessee and file both before and/or after a Leasing Schedule is executed by Lessee, any UCC financing statements (including any amendments thereto) or similar filings with such authorities and with any filing offices as Lessor may determine are necessary or advisable to protect Lessor's interest in the Equipment and/or the Lease, and Lessee agrees to reimburse Lessor upon demand for all costs incurred with respect thereto and with respect to any lien, tax or other related searches (that Lessor may determine are necessary or advisable) performed by Lessor (whether prior to or after the date of the Lease) in connection with any Lease transaction.

14. ASSIGNMENT: Lessor may assign or transfer all or any interest of Lessor in the Lease and/or the Equipment without notice to Lessee. **UPON ASSIGNMENT, LESSEE AGREES TO PAY WITHOUT ABATEMENT, DEDUCTION OR SETOFF ALL AMOUNTS WHICH BECOME DUE UNDER THE LEASE AND FURTHER AGREES THAT IT WILL NOT ASSERT AGAINST ASSIGNEE ANY DEFENSE, COUNTERCLAIM, RECOUPMENT CLAIM OR SETOFF WHICH LESSEE HAS OR MAY HAVE AT ANY TIME AGAINST LESSOR FOR ANY REASON WHATSOEVER.** Lessee acknowledges that any assignment or transfer by Lessor shall not materially change Lessee's duties or obligations under the Lease nor materially increase the burdens or risks imposed on Lessee. Lessee shall (if requested by Lessor) acknowledge in writing any assignments (including any material terms of the Lease) in a form supplied by Lessor. **LESSEE SHALL NOT ASSIGN OR IN ANY WAY DISPOSE OF ALL OR ANY PART OF ITS RIGHTS OR OBLIGATIONS UNDER THE LEASE OR ENTER INTO ANY SUBLEASE OF ALL OR ANY PART OF THE EQUIPMENT WITHOUT THE PRIOR WRITTEN CONSENT OF LESSOR.**

15. MISCELLANEOUS: The Lease shall be binding upon and inure to the benefit of the parties hereto, their legal representatives, heirs, and permitted successors and assigns. **TO THE EXTENT PERMITTED BY LAW, THE PARTIES HERETO WAIVE ALL RIGHTS TO A JURY TRIAL IN ANY LITIGATION ARISING FROM OR RELATED IN ANY WAY TO THE AGREEMENT, LEASE, OR THE TRANSACTION CONTEMPLATED HEREBY.** No waiver of any provision of the Lease shall be effective unless in writing, signed by the party to be charged, and no amendment, supplement or other modification of the Lease shall be effective unless in writing, signed by each of the parties to the Lease. No failure to exercise, no delay in exercising, and no single or partial exercise on the part of Lessor of any right, remedy, or power under the Lease, shall operate as a waiver thereof or preclude Lessor from exercising any other right, remedy or power under the Lease. Any provision of the Lease which is unenforceable in any jurisdiction shall, as to such jurisdiction, be ineffective to the extent of such prohibition or unenforceability, without invalidating the remaining provisions of the Lease. This Agreement shall supersede any and all proposals or agreements previously made between the parties relating to the subject matter of this Agreement. The Lease, and all related documents, including (a) amendments, addenda, consents, waivers and modifications which may be executed contemporaneously therewith or subsequently thereto, (b) documents received by Lessor from Lessee, and (c) financial statements, certificates and other information previously or subsequently furnished to Lessor, may be reproduced by Lessor by any photographic, photostatic, microfilm, micro-card, miniature photographic, compact disk reproduction or other similar process and Lessor may destroy any original document so reproduced. Lessee waives all right to object to the admissibility of such reproduction and stipulates that any such reproduction shall, to the extent permitted by law, be admissible in evidence as the original itself in any judicial or administrative proceeding (whether or not the original itself is in existence and whether or not the reproduction was made by Lessor in the regular course of business) and that any enlargement, facsimile or further reproduction of the reproduction shall likewise be admissible in evidence. No action, regardless of form, arising out of the Lease may be brought by Lessee more than two (2) years after the cause of action has accrued. The representations, warranties, obligations and indemnities of Lessee under the Lease shall survive the termination or cancellation of the Lease to the extent required for their full observance and performance. The obligations of each co-maker (if any) of the Lease, shall be primary, joint and several. It is the express intent of Lessor and Lessee not to violate any applicable usury laws or to exceed the maximum amount of time price differential or interest, as applicable, permitted to be charged or collected by applicable law, and any such excess payment will be applied first to Lease Payments in inverse order of maturity and then to any other payment obligations of Lessee under the Lease, and any remaining excess will be refunded to Lessee. In the event that Lessee fails to meet any of its obligations under the Lease, Lessor may at its option satisfy any of such obligations and Lessee shall, upon demand, reimburse Lessor for all costs (including insurance premiums, if any, but nothing in the Lease shall create an insurance relationship of any type between Lessor including its insurer and agents, and Lessee) incurred by Lessor in connection therewith, together with interest thereon at the late charge rate specified above. In the event that legal or other action is required to enforce Lessor's rights under the Lease (including the exercise of remedies under Section 9 hereof), Lessee agrees to reimburse Lessor on demand for its reasonable attorneys' fees and its other related costs and expenses, (whether incurred prior to or after judgment). The captions in the Lease are for convenience only and shall not define or limit any of the terms hereof. If Option A or Option B has been selected, Lessor and Lessee agree that (i) the Lease is a "finance lease" as that term is defined in Article 2A of the UCC, and (ii) Lessor shall be entitled to all the benefits applicable to a transaction that qualifies as a finance lease under Article 2A of the UCC. **THE AGREEMENT AND THE LEASE SHALL BE GOVERNED AND CONSTRUED IN ACCORDANCE WITH THE LAWS OF THE STATE OF NEW JERSEY WITHOUT GIVING EFFECT TO THE PRINCIPLES OF CONFLICT OF LAWS THEREOF.**

Initials: _____
Customer Initials

OFFICER'S CERTIFICATE

Issued in Connection with Leasing Schedule **#449-0053289-001** (the "Lease") to Master Equipment Lease Agreement dated (the "Agreement") between Lessee and Siemens Financial Services, Inc.

The undersigned, being a duly qualified and acting officer of **City of Oceanside** ("Lessee"), **DOES HEREBY CERTIFY AS FOLLOWS:**

1. Attached hereto is a true and complete copy of the resolution or other authorizing document adopted, signed and approved by the governing body of Lessee, authorizing execution and delivery of the Lease, as incorporating the terms and conditions of the Agreement, and all related documents, and consummation of the transactions contemplated thereby.

2. The official of Lessee, who executed the Lease on behalf of Lessee and whose signature appears on the Lease: (a) is the duly qualified and acting officer of Lessee as stated beneath his or her signature, and (b) has been authorized to execute the Lease, as incorporating the terms and conditions of the Agreement, on behalf of Lessee.

3. The following officials or representatives of Lessee are authorized to act on behalf of Lessee in matters relating to the Lease and the Equipment covered thereby:

Name	Office	Signature
Lonnie Thibodeaux	Water Utilities	
Mike McGrath	Water Utilities	
Greg Blakely	Water Utilities	

4. The budget year of Lessee is from _____ to _____.

IN WITNESS WHEREOF, the undersigned has executed this Officer's Certificate as of the date set forth below.

_____

Name: _____

Title: _____

Date: _____

Siemens Financial Services, Inc.

SIEMENS

LEASING SCHEDULE #: 449-0053289-001

LESSOR: **SIEMENS FINANCIAL SERVICES, INC.**
170 Wood Avenue South
Iselin, NJ 08830
(800) 327-4443

LESSEE: **City of Oceanside**
(Exact Legal Name; herein "Lessee")
300 North Coast Highway
(Address)
Oceanside, CA 92054
(City, State, Zip)

LEASING SCHEDULE # 449-0053289-001 (herein also referred to as the "Leasing Schedule" or "Lease"), to that certain Master Equipment Lease Agreement dated _____ (herein "Agreement"), between Lessor and Lessee.

1. **EQUIPMENT DESCRIPTION:** *(Attach schedule, if needed)*
Five (5) Siemens Water Technologies HP1220ST-125 Liquid Phase Adsorbers and ancillary equipment as more fully described on the attached Exhibit A
Equipment Cost $773,552.00

2. **TOTAL EQUIPMENT COST:** $773,552.00

3. **SUPPLIER(S):** Siemens Water Technologies Corp.

4. **LEASE TERM** (in months): 36

(plus any Interim Period, if applicable)

5. **COMMENCEMENT DATE:** The date of Equipment acceptance as set forth in a delivery and acceptance certificate, delivered to Lessor, in the form supplied by Lessor:

6. **NUMBER OF LEASE PAYMENTS:** 36

7. **LEASE PAYMENT** (per payment period):
36 payments of $23,043.95

Payable:
[ ] **In Advance –** First Lease Payment due on the Commencement Date, or if Interim Rent is applicable, the first day immediately following the Interim Period.
[X] **In Arrears –** First Lease Payment due on the first (Payment Period) anniversary of the Commencement Date, or if Interim Rent is applicable, the first day of the second month immediately following the Interim Period.

8. **PAYMENT PERIOD: MONTHLY**

9. (a) **ADVANCE LEASE PAYMENT(S): # (S): 0**
TOTALING $0.00

9. (b) **DOCUMENTATION FEE:** $0.00 due on invoice

10. (a) **EQUIPMENT LOCATION** (if different from Lessee's address above): 215 Fireside Drive , Oceanside, CA 92054

10. (b) **LESSEE'S STATE OF INCORPORATION/ORGANIZATION:** California -

11. **INTERIM RENT APPLICABLE:** [] YES [X] NO
AMOUNT: $0.00

12. **PURCHASE OPTION:** Lessee selects the following option (which shall be irrevocable by Lessee once exercised):
OPTION A [] a **Fair Market Value** purchase option.
OPTION B [X] a **Fixed Purchase Option** at a Purchase Option Price of $167,500.00 of the Total Equipment Cost.

OPTION C [] a **Nominal Fixed Purchase Option** at a Purchase Option Price of

THE TERMS AND CONDITIONS OF THE FOREGOING OPTIONS AND OTHER IMPORTAND PROVISIONS ARE SET FORTH ON THE FOLLOWING PAGE

IN WITNESS WHEREOF, the parties hereto have duly executed the Lease as of the dates set forth below. For all purposes hereof, the date of the Lease shall be the date of Lessor's acceptance as set forth below. **LESSEE ACKNOWLEDGES THAT NEITHER LESSOR NOR THE SUPPLIER IS AN AGENT OR REPRESENTATIVE OF THE OTHER AND NEITHER HAS AUTHORITY TO BIND THE OTHER.**

ACCEPTED BY:

BY EXECUTION HEREOF, THE SIGNER CERTIFIES THAT (S)HE HAS READ THE ENTIRE LEASE, THAT LESSOR OR ITS REPRESENTATIVES HAVE MADE NO AGREEMENTS OR REPRESENTATIONS EXCEPT AS SET FORTH HEREIN, OR IN THE AGREEMENT, AND THAT (S)HE IS DULY AUTHORIZED TO EXECUTE THE LEASE ON BEHALF OF LESSEE.

LESSOR: **SIEMENS FINANCIAL SERVICES, INC.**

BY: _____
(Authorized Signature)

NAME: _____
(Printed or Typed)

TITLE: _____

DATE: _____

LESSEE: **City of Oceanside**

BY: _____
(Authorized Signature)

NAME: _____
(Printed or Typed)

TITLE: _____

DATE: _____

OPTION A - FAIR MARKET VALUE PURCHASE OPTION: If Option A has been selected, provided no Default has occurred and is continuing and provided the Lease shall not have previously terminated, Lessee shall have the option, exercisable by written notice to Lessor received by Lessor at least one hundred twenty (120) but not more than one hundred eighty (180) days before the expiration of the (original) Lease Term, to purchase on the day following the last day of such Lease Term (herein "Purchase Date") all but not less than all of the Equipment subject to the Lease for its "Fair Market Value". Fair Market Value shall mean the value of the Equipment (on an installed and operating basis) which would be obtained in an arm's-length transaction between an informed and willing buyer-user (other than a lessee currently in possession or a used equipment dealer) under no compulsion to buy, and an informed and willing seller under no compulsion to sell, and in such determination, costs of removal from the location of current use shall not be a deduction from such value. Fair Market Value shall be determined by the mutual agreement of Lessor and Lessee in accordance with the preceding sentence. If Lessor and Lessee cannot agree, Fair Market Value shall be determined by a qualified independent equipment appraiser selected by Lessor and approved by Lessee, and Lessee shall pay the cost of appraisal. Provided Lessee has timely exercised its option to purchase, Lessee shall pay to Lessor on the Purchase Date the aforementioned purchase price in cash, together with all sales and other taxes or costs applicable to the transfer of the Equipment and any other amounts as may be due and owing under the Lease, whereupon Lessor shall transfer its interest in the Equipment to Lessee without recourse, on an **AS-IS, WHERE-IS** basis and without any warranty, express or implied from Lessor, other than the absence of any liens by or through Lessor, except those (if any) Lessee is obligated to discharge.

OPTION B - FIXED PURCHASE OPTION: If Option B has been selected, provided no Default has occurred and is continuing and provided the Lease shall not have previously terminated, Lessee shall have the option, exercisable by written notice to Lessor received by Lessor at least one hundred twenty (120) but not more than one hundred eighty (180) days before the expiration of the (original) Lease Term, to purchase on the day following the last day of such Lease Term (herein "Purchase Date") all but not less than all of the Equipment subject to the Lease for the amount specified in Option B. Provided Lessee has exercised its option to purchase, Lessee shall pay to Lessor on the Purchase Date the aforementioned purchase price in cash, together with all sales and other taxes or costs applicable to the transfer of the Equipment and any other amounts as may be due and owing under the Lease, whereupon Lessor shall transfer its interest in the Equipment to Lessee without recourse, on an **AS-IS, WHERE-IS** basis and without any warranty, express or implied from Lessor, other than the absence of any liens by or through Lessor, except those (if any) Lessee is obligated to discharge.

OPTION C - NOMINAL FIXED PURCHASE OPTION: If Option C has been selected, provided no Default has occurred and is continuing and provided the Lease shall not have previously terminated, Lessee may purchase all but not less than all of the Equipment at the end of the (original) Lease Term for the nominal purchase price specified in Option C. Lessee shall pay to Lessor on the day following the last day of such Lease Term such purchase price together with all sales and other taxes applicable to the transfer of the Equipment and any other amounts as may be due and owing under the Lease, whereupon Lessor shall transfer its interest in the Equipment to Lessee without recourse, on an **AS-IS, WHERE-IS** basis and without any warranty, express or implied from Lessor, other than the absence of any liens by or through Lessor, except those (if any) Lessee is obligated to discharge.

13. LEASE PAYMENTS; ADJUSTMENTS: Lessee acknowledges that the Lease Payments herein, are based upon the Total Equipment Cost set forth above, and as a result of authorized changes to the Equipment, the final Total Equipment Cost may increase or decrease by up to 10%. In such event, the Lease Payments shall be adjusted accordingly, and Lessee authorizes Lessor to correct the Lease (and all related documentation) to reflect such changes, and Lessee, if requested by Lessor, shall confirm such changes to Lessor in writing.

14. SUPPLY CONTRACT: Lessee acknowledges either that (a) Lessee has reviewed and approved any written purchase agreement or purchase order covering the Equipment ("Supply Contract") purchased from Supplier, or (b) Lessor has informed or advised Lessee, in writing, either previously or by the Lease, of the following: (i) the identity of the Supplier, (ii) that Lessee may have rights under the Supply Contract, and (iii) that Lessee may contact the Supplier for a description of any such rights Lessee may have under the Supply Contract. If Lessee has entered into a written Supply Contract, then Lessee hereby assigns to Lessor all of Lessee's rights and interests in and to the Equipment and the Supply Contract. If requested by Lessor, Lessee shall obtain any consent required for such assignment. If Lessee has not entered into any such Supply Contract, Lessee authorizes Lessor to (and Lessor may at its option) act on behalf of Lessee to obtain a Supply Contract from Supplier. Lessor's sole obligation under the Supply Contract shall be to pay the Supplier for the Equipment, if (and only if) the Equipment is accepted by Lessee under the Lease, and Lessee, not Lessor, shall at all times remain liable to perform all of the duties and obligations under the Supply Contract. Lessee hereby represents and warrants that: (a) Lessee has delivered herewith a true and correct copy of the Supply Contract; (b) neither Supplier nor Lessee is in default under the Supply Contract; (c) the Supply Contract shall not be amended without Lessor's prior written consent; and (d) the Supply Contract is free from all claims, security interests, liens and encumbrances, except for the interest being conveyed hereunder. Lessee shall indemnify and hold Lessor (and its assigns) harmless with respect to any and all claims relating to the performance of Lessee's obligations under the Supply Contract.

15. MISCELLANEOUS: Lessor and Lessee agree that the terms and conditions of the Agreement are hereby incorporated into this Leasing Schedule to the same extent as if such terms and conditions were set forth in full herein. **THIS LEASING SCHEDULE (AS INCORPORATING THE TERMS OF THE AGREEMENT), TOGETHER WITH ANY APPLICABLE STIPULATED LOSS VALUE SCHEDULE, CONTAIN THE COMPLETE AGREEMENT OF THE PARTIES WITH RESPECT TO ITS SUBJECT MATTER AND SUPERSEDE AND REPLACE ANY PREVIOUSLY MADE PROPOSALS, REPRESENTATIONS, WARRANTIES AND AGREEMENTS.** Capitalized terms used herein, which are not otherwise defined herein, shall have the same meanings as set forth in the Agreement. **LESSOR AND LESSEE AGREE THAT ALL ACTIONS OR PROCEEDINGS RELATING DIRECTLY OR INDIRECTLY TO THE LEASE AND THE TRANSACTION CONTEMPLATED HEREBY MAY BE LITIGATED IN THE FEDERAL, STATE OR LOCAL COURTS SITTING IN OR FOR THE COUNTY OF MIDDLESEX, NEW JERSEY, AND HEREBY SUBMIT TO THE NON-EXCLUSIVE JURISDICTION OF SUCH COURTS.** Lessor and Lessee acknowledge that such courts are convenient forums and waive any defense based upon doctrines of venue or forum non-conveniens or similar rules or doctrines. Lessee consents to service of process by certified mail or by overnight delivery by a nationally recognized courier at its address above (or to such other address as Lessee shall have designated by proper notice) in connection with any legal action brought by Lessor. Any amendments contained or incorporated into this Leasing Schedule, which in any way alter the terms of the Agreement, shall be effective only with respect to this Leasing Schedule and shall be ineffective with respect to any other Leasing Schedule. The Lease shall become effective at the time of Lessor's acceptance (by execution hereof) at its corporate offices, by an authorized representative of Lessor. Whenever Lessee is required to pay the applicable Stipulated Loss Value hereunder with respect to all or any portion of the Equipment, upon payment of such amount by Lessee and satisfaction of all other obligations of Lessee under the Lease (and satisfaction of all other obligations secured by such Equipment under any Leasing Schedule or any other agreement), Lessor shall transfer its interest in such Equipment to Lessee without recourse, on an AS-IS, WHERE-IS basis and without any warranty, express or implied from Lessor, other than the absence of any liens by or through Lessor, except those (if any) Lessee is obligated to discharge. In the event the Lease is deemed to be a security agreement, (i) Lessee hereby grants to Lessor and Lessor shall have, to secure all payments and all other obligations of Lessee to Lessor under the Lease, a security interest in the Equipment together with all accessions, attachments, replacements, substitutions, modifications and additions thereto, now or hereafter acquired, and all Proceeds (as defined in the applicable Uniform Commercial Code) thereof (including insurance proceeds), and (ii) notwithstanding any applicable state laws to the contrary, Lessee agrees to reimburse Lessor for all reasonable attorneys' fees incurred by it incident to any action or proceeding involving the Lessee brought pursuant to the Bankruptcy Code, as amended, which are allowable under Section 506(b) thereof.

Initials: _____
Customer Initials

SIEMENS

EXHIBIT A

TABLE ONE SCOPE OF SUPPLY CHECK LIST

No	Work Scope Item	Others	Siemens
1	Equipment system(s) as proposed herein		X
2	Equipment quality assurance check on site prior to startup/training.		X
3	System layout	X	X
4	Site(s) for the Siemens Water Technologies equipment/facility that comply with the requirements of the hydraulic profile, process flow or special design requirements, including concrete pad foundation	X	
5	Equipment assembly per Siemens general equipment drawings		X
6	Valved supply of temporary pump test water to the Siemens Water Technologies equipment/facility battery limits(s), if applicable.	X	
7	Instrumentation and controls field calibration		X
8	Field testing of unit assemblies including hydrotesting		X
9	Technical direction of start-up including training, Two trips, two mandays – one trip for GAC System training and one trip for Automation training.		X
10	Supply of clean backwash water for initial backwash/rinse at startup and backwash water for continued operation as required.	X	
11	Cleaning and chemical disinfection of GAC adsorber and piping		X
12	Delivery of initial load of GAC and installation into the adsorbers		X
13	Freeze protection and/or insulation	X	
14	O&M Manuals (hard copy and electronic version in PDF format)		X
15	Spent GAC profiling	X	

Initials:_____

SIEMENS

TABLE TWO - HP1220ST-125

SYSTEM SPECIFICATION SUMMARY:

HP1220ST Liquid Phase Adsorbers are designed to treat a wide range of contaminated process streams. All piping and valves are configured for parallel or isolation flows. Each adsorber includes GAC inlet and outlet piping, and backwash capabilities. All vessels are typical construction for Granular Activated Carbon Filters. The system consists of five adsorbers with all piping, valves, and gauges assembled for ease of operation. The adsorbers are equipped with underdrains capable of maximum flow rate of 1100 GPM.

EACH VESSEL:

- Vessel Diameter ..... 144"
- Side Shell Height ..... 60"
- Overall Height (Approx.) ....15'-4"
- Working Pressure ..... 125 psi @ 150 °F
- Manway:
  - Flanged at side shell .... .20"
  - Elliptical type at head ....14" x 18"
- Sample Ports on Side Shell ..... (3)
- Vessel Volume ..... 7520 gal.
- Vessel Carbon Capacity ..... 20,000 lbs.
- Carbon Bed Volume-Typical ..... 714 Ft^3
- Maximum Flow Rate Typical ..... 1100 GPM
- Empty Bed Contact Time/ Vessel ..... 5.9 min/vessel @ 900 GPM
- Design Criteria ..... ASME
- Code Stamping ..... YES
- Material ..... Carbon Steel
- Supports ..... Wide Flange Legs
- Lifting ..... Lifting Lugs
- Seismic ..... Zone 4
- Interior Surface Prep SSPC-SP5
- Interior Surface Coating ..... Plasite 4110 35 mil dft min
- Exterior Surface Primer ..... (1 coat) 2-3.5 dry mils
  ..... Tnemec Series 10 Primer
- Exterior Surface Coating ..... (2 coats) 1.5-2.0 mils per coat
  ..... Tnemec Series 29 Tufcryl
- Color ..... Chowder

UNDERDRAINS:

- External ring header ..... Sch 10 316L Stainless Steel
- Septa Screens ..... 8 ea-316L Stainless Steel V-Wire Screens 4 ½" Dia x 10"

VALVE ASSEMBLY AND PIPING:

- Piping:
  - Process Piping (in proximity to air) ..... Sch 10 316L Stainless Steel
  - Process Piping (not in contact with air) ..... Sch 80 PVC
  - GAC Transfer Piping ..... 4" Sch 10 316L Stainless Steel
- Valves:
  - Process ..... Per AWWA C504
    ..... 8" Butterfly, Ductile Iron Body w/ductile iron Disk, pneumatic automated
  - GAC Transfer ..... 4" Flanged 316 Stainless Steel Full Port Ball Valve
  - Vent/Wash ..... 2" Bronze Ball Valve
  - Sample Ports (3) ..... 1/2" Bronze Ball Valve

WEIGHT:

- Adsorber Shipping Weight ..... 22,500 lb
- Adsorber Carbon Weight ..... 20,000 lb
- Adsorber Operating Weight ..... 72,500 lb

Initials:____

SIEMENS

TABLE THREE –AUTOMATION SCOPE OF SUPPLY

Our itemized electrical scope of supply is listed below. Only items specifically listed will be provided.

Item	Qty.	Description
A.	1	Carbon System Master Control Panel, designated CMCP-1, custom manufactured in a NEMA 3R rated, Stainless steel, wall mounted enclosure. To operate on 120v, single phase service (To be sourced from power distribution panel, Item B). To control a HP series 5-Vessel GAC system, to run in parallel mode. To include: 1 Siemens Water Technologies LC Controller. To include: • Main Processor • Local I/O o Digital Inputs (12) o Digital Outputs (24) o Analog Inputs (12) o Analog Outputs (8) 1 OI 3000 Operator Interface 1 Loop Power Supply 1 Uninterruptible Power Supply 1 Lot of miscellaneous devices, terminals, control breaker, and fuses.
B.	1	Power Distribution Panel, designated PDP-1, custom manufactured in a NEMA 3R rated, Stainless steel, wall mounted enclosure. (with dead-front inner door) To operate on 120v, single phase service. To provide direct access to Main Panel. To include: 1 Main Breaker 1 Control Power Transformer 480:120 5 Valve Power Feed Breakers 1 Lot of miscellaneous devices, terminals, control breaker, GFCI receptacles, and fuses.
C.	1	Lot PLC Programming Services, to provide the following functionality: • Modulation of Effluent Valve, for each of 5 vessels, to maintain the flow to a operator set-point, (based on a effluent flow meter from each vessel) • Display Backwash flow rate

Initials:_____

SIEMENS

SIEMENS FINANCIAL SERVICES, INC.

LEASING SCHEDULE #449-0053289-001

CONTRACT ADDENDUM

This Addendum shall become a part of that certain Leasing Schedule **#449-0053289-001** (the "Lease") to Master Equipment Lease Agreement dated (the "Agreement") between Siemens Financial Services, Inc. ("Lessor") and the undersigned lessee ("Lessee"). If there is any conflict between the terms of this Addendum and the terms of the Lease, the terms of this Addendum shall control. Capitalized terms used herein and not otherwise defined herein, unless the context otherwise requires, shall have the same meanings set forth in the Lease.

Lessee and Lessor hereby agree as follows:

1. The sixth line in the first sentence of Section 5 of the Agreement is modified to delete the word "solely". The last sentence of Section 5 of the Agreement which begins with the words "Lessee agrees to indemnify" is amended by adding to the beginning thereof the words "To the extent permitted by law,".

2. Section 8 of the Agreement is hereby amended by the addition of the following Subsection (c) to read in its entirety as follows:

> "(c) Notwithstanding the foregoing, Lessor agrees that Lessee may self insure with respect to the liability and property damage risks referred to in Section 8(b) above. Lessee, however, agrees to provide Lessor with proof of such insurance in form and substance acceptable to Lessor and to protect, defend, indemnify and hold Lessor harmless from and against any losses, damages, liabilities and expenses (including reasonable attorneys' fees) incurred by Lessor arising out of or in connection with any claim involving or relating to the Equipment. Any amounts paid by Lessor with respect to the above shall be reimbursed by Lessee to Lessor on demand. In the event that Lessor shall reasonably deem itself insecure, Lessee, upon notice from Lessor, shall comply with the original insurance provisions contained in Section 8(b) above."

3. Delete Sections 9(c) and (d) of the Agreement and add to the end of the first sentence of Section 9(b) of the Agreement the following: "; and (vii) by written notice to Lessee, Lessor may declare an amount equal to all amounts then due under the Lease, and all remaining Lease Payments due during the fiscal year in effect when the Default occurs, to be immediately due and payable, whereupon the same shall become immediately due and payable".

4. Add the following new subsections to Section 12 of the Agreement:

"(l) Lessee has, in accordance with the requirements of law, fully budgeted and appropriated sufficient funds to make the Lease Payments scheduled to come due for the current fiscal year and to meet its other obligations for such period, and such funds have not been expended for other purposes and Lessee currently expects that it will fully budget and appropriate sufficient funds to make Lease Payments throughout the Lease Term (but Lessee retains its right to terminate the Lease pursuant to Section 16 hereof); (m) Lessee shall cause to be done all things necessary to keep the Lease in full force and effect except as otherwise permitted by Section 16 hereof; (n) Lessee has an immediate need for the Equipment, which Lessee expects will continue throughout the Lease Term; (o) the use of the Equipment is, and Lessee currently expects that it will continue to be throughout the Lease Term, essential to Lessee's proper, efficient and economic operation; (p) the useful life of the Equipment is as great or greater than the Lease Term; (q) the Equipment shall not be used in connection with a trial or test program of Lessee; (r) as of twenty (20) years prior to the date of this Agreement and as of the date of this Agreement, Lessee has not failed to appropriate funds for payment of any amount due pursuant to a lease purchase agreement, a conditional sales agreement or any similar type of obligation; (s) as of twenty (20) years prior to the date of this Agreement and as of the date of this Agreement the Lessee has not been and is not in

default under any bond, note, lease purchase agreement or other type of financial obligation to which it is or has been a party; and (t) Lessee has complied with such public bidding and other requirements as may be applicable to the Lease and the Supply Contract, including, without limitation, the acquisition by Lessee of the Equipment. Lessee's representations, covenants and warranties under the Lease shall survive the expiration of the Lease."

5. Section 15 of the Agreement shall be modified to change the eight sentence to replace "two (2)" with "four (4)". The last sentence in Section 15 shall be modified to replace "New Jersey" with "California".

6. Add the following new Section 16 to the Agreement:

"**16. Non-Appropriation.** Notwithstanding anything contained in the Lease to the contrary, in the event no funds or insufficient funds are appropriated and budgeted in any fiscal period for Lease Payments or other amounts due under the Lease, the Lease shall terminate on the last day of the fiscal period for which appropriations were received without penalty or expense to Lessee of any kind whatsoever, except as to the portions of Lease Payments or other amounts agreed upon in the Lease for which funds shall have been appropriated and budgeted. Lessee shall immediately notify Lessor or its assignee in writing of such occurrence, but failure to give such notice shall not prevent such termination. In the event of such termination, Lessee shall immediately cease all use of the Equipment and shall, at its sole expense and risk, immediately de-install, disassemble, pack, crate, insure, and return the Equipment to Lessor in accordance with the requirements of, and in the condition required by, the Lease, including, without limitation, Section 11 of the Agreement. Lessee agrees to execute and deliver to Lessor all documents reasonably requested by Lessor to evidence the transfer of legal and beneficial title to the Equipment to Lessor and to evidence the termination of Lessee's interest in the Equipment. Lessor shall have all legal and equitable rights and remedies to take possession of the Equipment."

7. Section 5 of the Lease shall be modified to provide, "Notwithstanding anything contained in this Lease to contrary, the Lease shall terminate and Lessor shall have no obligations hereunder if the Lease has not commenced on or before October 30, 2008."

8. The fourth Sentence Section 15 of the Lease shall be modified to replace "**MIDDLESEX COUNTY, NEW JERSEY**, with "**SAN DIEGO COUNTY, CALIFORNIA**." The sixth sentence in Section 15 of the Lease is deleted in its entirety and replaced with the following: "The parties agree that service of process for any action arising out of or relating to this Lease shall be in accordance with applicable state law or the rules of court for the courts having jurisdiction over such matter." Section 15 shall also be modified to provide the following additional sentence: "In the event that there is any action brought in a court of competent jurisdiction to enforce rights and obligations under this Agreement, the prevailing party in such suit, as determined by final judgment of such court, shall be entitled to payment for its legal fees and expense paid by the non prevailing party."

IN WITNESS WHEREOF, the Lessor and Lessee have caused this Addendum to be executed by their authorized representatives. For all purposes hereof, the date of this Addendum shall be the date of Lessor's execution as set forth below.

LESSOR:	**LESSEE:**
SIEMENS FINANCIAL SERVICES, INC.	**CITY OF OCEANSIDE**
BY: _____ *(Authorized Signature)*	**BY:** _____ *(Authorized Signature)*
NAME: _____ *(Printed or Typed)*	**NAME:** _____ *(Printed or Typed)*
TITLE: _____ *(Printed or Typed)*	**TITLE:** _____ *(Printed or Typed)*
DATE: _____	**DATE:** _____

APPROVED AS TO FORM
OCEANSIDE CITY ATTORNEY
BARBARA L. HAMILTON
Assistant City Attorney

CITY OF OCEANSIDE

WATER UTILITIES DEPARTMENT

March 19, 2008

Siemens Financial Services, Inc.
170 Wood Avenue South
Iselin, NJ 08830

Attn: Julianne Butler-Sterk

SUBJECT: City of Oceanside, Master Equipment Lease Agreement
(715-85-7425)

This letter is to advise you that the City of Oceanside belongs to the San Diego Pooled Insurance Program Agency (SANDPIPA), a Joint Powers Authority (JPA), and is self-insured through that agency.

The City has a self-insured retention of $250,000 for its liability coverage with an additional $2,000,000 in primary insurance coverage being provided through the self-funded pool. Beyond that, excess insurance is provided through the JPA with a commercial carrier up to $38,000,000.

Property damage insurance is carried with various commercial insurance carriers for the first $50,000,000 and excess coverage beyond that to $650,000,000.

Sincerely,

Teri Ferro
Financial Services Director

cc: Lonnie Thibodeaux, Water Utilities Director

SIEMENS

INSURANCE COVERAGE DISCLOSURE

Customer Name: City of Oceanside
Corporate Address: 300 North Coast Highway
Oceanside, CA 92054

Contract #: 449-0053289-001

Equipment Location: 215 Fireside Drive , Oceanside, CA 92054

Equipment Description: Five (5) Siemens Water Technologies HP1220ST-125 Liquid Phase Adsorbers and ancillary equipment as more fully described on the attached Exhibit A

Please complete the following:

Carrier: _____

Agency Name: _____

Address: _____

Telephone No.: _____ Fax No.: _____

Contact Name: _____

The insurance agent named above must be instructed to issue:

1. All risks property insurance with respect to the Equipment, evidenced by a certificate of insurance (on form Acord 27), naming Siemens Financial Services, Inc., its successors and assigns as loss payee. **The Contract # above must be clearly identified on the certificate.**

2. Comprehensive general liability insurance with respect to the Equipment, evidenced by a certificate of insurance (on form Acord 25), naming Siemens Financial Services, Inc., its successors and assigns as additional insured. **The Contract # above must be clearly identified on the certificate.**

Siemens Financial Services, Inc. requires the following insurance coverage, which must be noted on the certificate(s) of insurance provided by the insurance agent:

Property Insurance: **$ 773,552.00**

Liability Insurance: Minimum Amount of: **$1,000,000**

Customer: **Please forward this completed form to Julianne Butler-Sterk as well as a copy to your Insurance Carrier and have them include your contract number(s) on the Evidence of Insurance Certificate (on forms Acord 25 and 27).**

Carrier: **Please fax evidence of insurance (on forms Acord 25 and 27) to:**

Siemens Financial Services, Inc.
170 Wood Avenue South
Iselin, NJ 08830
Fax No.: **(732) 476-3411**
Attention: Julianne Butler-Sterk

SIEMENS

CUSTOMER BILLING INFORMATION

This is to instruct Siemens Financial Services, Inc., in the mailing address for invoices regarding contract # 449-0053289-001

Invoices should be addressed as follows:

To the Attention of: Water Utilities Department

Forward copies of leasing correspondence to the person above? YES ☒ NO ☐

Individual's Title: Lonnie Thibodeaux

Corporate Name: City of Oceanside

Billing Address: 300 N. Coast Highway

City, State, Zip Code: Oceanside, CA 92054

State of Incorporation: California

Corporate ID #:

Federal ID #: 95-1688570

Invoice resolution contact: Judith Ludlow

Telephone Number: 760-435-5816 Fax Number: 760-435-5814

Billing Contact E-Mail Address: jludlow@ci.oceanside.ca.us

Correspondence E-Mail Address: jdaFForn@ci.oceanside.ca.us

CUSTOMER PURCHASE ORDER #:

_____

SIEMENS

Siemens Financial Services, Inc.

DELIVERY AND ACCEPTANCE CERTIFICATE

Siemens Financial Services, Inc. (the "Lessor")
170 Wood Avenue South
Iselin, NJ 08830

Leasing Schedule: # 449-0053289-001 (the "Lease")

Equipment Description:

Five (5) Siemens Water Technologies HP1220ST-125 Liquid Phase Adsorbers and ancillary equipment as more fully described on the attached Exhibit A

The undersigned hereby certifies that all of the above described (or as described on the attached Schedule A) items of equipment (collectively "Equipment"), to be leased to the undersigned pursuant to the above identified Lease between Lessor and the undersigned, have been delivered, that installation has been fully completed as required, and that the Equipment is unconditionally accepted by us as satisfactory in all respects.

In view of the above, the undersigned hereby irrevocably authorizes Lessor to pay for the Equipment in accordance with the terms of any applicable purchase order(s) for the same.

Customer Name: City of Oceanside

Authorized Signature: _____

Printed or Typed Name: _____

Title: _____

Date of Equipment Acceptance: _____