ITEM NO. 14

# STAFF REPORT

# CITY OF OCEANSIDE

DATE: May 3, 2006

TO: Community Development Commission
Small Craft Harbor District Board

FROM: Planning Division

SUBJECT: **CONSIDERATION OF A RESOLUTION APPROVING A REGULAR COASTAL PERMIT FOR THE PACIFIC STREET BRIDGE**

## SYNOPSIS

Staff recommends that the Community Development Commission and Harbor Board of Directors adopt a resolution approving a Regular Coastal Permit (RC- 204-06) for a new, permanent bridge (the Pacific Street Bridge over the San Luis Rey River project) and related parking lot and street improvements in the Harbor and along Pacific Street south of the river.

## BACKGROUND

The proposed Pacific Street Bridge, which links downtown to the harbor, is a part of the City's circulation element and is needed for improved emergency access. The current Pacific Street crossing washes out during periods of significant rainfall. The crossing last washed out in January 2005.

In March 1998, the City Council affirmed the need for the Pacific Street crossing and directed staff to seek funding alternatives for a new permanent bridge crossing. On December 20, 1999, the Federal Highway Administration allocated $10 million for the design and construction of the Pacific Street Bridge across the San Luis Rey River, and authorized the City to proceed with preliminary engineering.

The City Council certified the final Environmental Impact Report on November 5, 2003, and the Federal Highway Administration issued a Finding of No Significant Impact on May 25, 2004. Also on November 5, 2003, the Community Development Commission/Oceanside Small Craft Harbor District approved the Regular Coastal Permit (RC-207-03) for the Pacific Street Bridge (see attached). The proposed Pacific Street Bridge project will include a 600-foot-long, 4-span, concrete bridge, supported on three piers and abutments, with a traffic lane, bike path and sidewalk in each direction. Harbor Drive South and Pacific Street will be realigned vertically to meet the bridge approaches. After the new Pacific Street Bridge is opened the existing low-water crossing will be removed. As a mitigation measure a coastal wetlands will be created upstream on the north side of the San Luis Rey River and east of Interstate 5.

## ANALYSIS

The project is situated within the Coastal Zone and requires a Coastal Permit. Under the provisions of the Local Coastal Plan, the project site is designated as Zone 10 – Open Space. The Coastal Permit approved in November 2003 expired two years later, so a new Coastal Permit must be issued.

## FISCAL IMPACT

Does not apply.

## COMMISSION OR COMMITTEE REPORT

Does not apply.

## CITY ATTORNEY'S ANALYSIS

The referenced documents have been reviewed by the City Attorney and approved as to form.

## RECOMMENDATION

Staff recommends that the Community Development Commission and Harbor Board of Directors adopt a resolution approving the Regular Coastal Permit (RC- 204-06) for a new, permanent bridge (the Pacific Street Bridge over the San Luis Rey River project) and related parking lot and street improvements in the Harbor and along Pacific Street south of the river.

PREPARED BY:

Jerry Hittleman
Acting City Planner

SUBMITTED BY:

Steven R. Jepsen
City Manager

REVIEWED BY:

Michelle Skaggs Lawrence, Assistant to the City Manager

Mike Blessing, Deputy City Manager

MB

Attachments:
Resolution approving a Regular Coastal Permit
November 5, 2003 Staff Report

OCEANSIDE COMMUNITY DEVELOPMENT COMMISSION

RESOLUTION NO.

A RESOLUTION OF THE OCEANSIDE COMMUNITY DEVELOPMENT COMMISSION APPROVING A REGULAR COASTAL PERMIT (RC-204-06) FOR A PERMANENT BRIDGE LOCATED AT PACIFIC STREET AND THE SAN LUIS REY RIVER – APPLICANT: CITY OF OCEANSIDE

WHEREAS, on May 3, 2006, the Community Development Commission held a duly noticed public hearing to consider an application for a Regular Coastal Permit (RC-204-06) for the Pacific Street Bridge Project located at Pacific Street and the San Luis Rey River:

WHEREAS, the applicant is the City of Oceanside;

WHEREAS, there is hereby imposed on the subject development project certain dedications, reservations and other exactions pursuant to State law and City ordinance;

WHEREAS, studies and investigations made by the Community Development Commission reveal the following facts:

FINDINGS:

**For the Regular Coastal Permit:**

1. The proposed bridge is consistent with the policies of the Local Coastal Program as implemented through the City Zoning Ordinance. In addition, the project will not substantially alter or impact existing public views of the coastal zone area.
2. The proposed bridge will not obstruct any existing or planned public beach access; is needed for a second permanent access point to the Harbor, and will enhance the environment of the San Luis Rey River, therefore, the project is in conformance with the policies of Chapter 3 of the Coastal Act.

WHEREAS, the Community Development Commission finds that an environmental impact report was prepared pursuant to the State Guidelines of the California Environmental Quality Act and is still in effect.

/////////

/////////

NOW, THEREFORE, the Community Development Commission of the City of Oceanside does resolve that Regular Coastal Permit (RC-204-06) is hereby approved subject to the following conditions:

**Engineering:**

1. All right-of-way alignments, street dedications, exact geometrics and widths shall be dedicated and improved as required by the City Engineer.
2. Design and construction of all improvements shall be in accordance with standard plans, specifications of the City of Oceanside and subject to approval by the City Engineer.
3. Prior to issuance of a grading permit a phasing plan for the construction of public and private improvements including landscaping, shall be approved by the City Engineer.
4. The approval of the project shall not mean that the proposed closure, vacation or abandonment of any public street, right-of-way, easement or facility indicated on the development plan is granted or guaranteed to the developer. The developer is responsible for applying for all closures, vacations and abandonments as necessary. The application(s) shall be reviewed and approved or rejected by the City under separate process(es) per codes, ordinances, and policies in effect at the time of the application.
5. The developer shall monitor, supervise and control all construction and construction-supportive activities, so as to prevent these activities from causing a public nuisance, including but not limited to, insuring strict adherence to the following:
   a) Dirt, debris and other construction material shall not be deposited on any public street or within the City's storm water conveyance system.
   b) All grading and related site preparation and construction activities shall be limited to the hours of 7 a.m. to 6 p.m., Monday through Friday, and on Saturday from 7 a.m. to 6 p.m. for work that is not inherently noise-producing unless otherwise extended by the City and all work should utilize the latest technology for quiet equipment. All on-site construction staging areas shall be as far as possible (minimum 100 feet) from any existing residential development. Because construction noise may still be intrusive in the evening or on holidays, the City of

Oceanside Noise Ordinance also prohibits "any disturbing excessive, or offensive noise which causes discomfort or annoyance to reasonable persons of normal sensitivity."

c) The construction site shall accommodate the parking of all motor vehicles used by persons working at or providing deliveries to the site.

6. Sight distance requirements at all street intersections shall conform to the intersection sight distance criteria as provided by the California Department of Transportation Highway Design Manual.

7. A traffic control plan shall be submitted to and approved by the City Engineer prior to the start of work within open City rights-of-way. Traffic control during construction of streets that have been opened to public traffic shall be in accordance with construction signing, marking and other protection as required by the CalTrans Traffic Manual. Traffic control during construction adjacent to or within all public streets must also meet CalTrans standards.

8. Any existing broken pavement, concrete curb, gutter or sidewalk or any damaged during construction of the project, shall be repaired or replaced as directed by the City Engineer.

9. Grading and drainage facilities shall be designed to adequately accommodate the local storm water runoff and shall be in accordance with the City's Engineers Manual and as directed by the City Engineer.

10. The applicant shall obtain any necessary permits and clearances from all public agencies having jurisdiction over the project due to its type, size, or location, including but not limited to the U.S. Army Corps of Engineers, California Department of Fish and Game, U.S. Fish and Wildlife Service and/or San Diego Regional Water Quality Control Board (including NPDES), San Diego County Health Department, prior to the issuance of grading permits.

11. Prior to any grading of any part of the tract or project, a comprehensive soils and geologic investigation shall be conducted of the soils, slopes, and formations in the project. All necessary measures shall be taken and implemented to assure slope stability,

erosion control, and soil integrity. No grading shall occur until a detailed grading plan, to be prepared in accordance with the Grading Ordinance and Zoning Ordinance, is approved by the City Engineer.

12. An erosion control plan and precise grading and private improvement plan shall be prepared, reviewed, secured and approved prior to the issuance of any building permits. The plan shall reflect all pavement, flatwork, landscaped areas, special surfaces, curbs, gutters, medians, striping, signage, footprints of all structures, walls, drainage devices and utility services. Parking lot striping and any on-site traffic calming devices shall be shown on all precise grading and private improvement plans.

13. Landscaping plans, including plans for the construction of walls, fences or other structures at or near intersections, must conform to intersection sight distance requirements. Landscape and irrigation plans for disturbed areas must be submitted to the City Engineer prior to the issuance of a preliminary grading permit and approved by the City Engineer prior to the issuance of building permits. Frontage and median landscaping shall be installed prior to the issuance of any building permits. Project fences, sound or privacy walls and monument entry walls/signs shall be designed, reviewed and constructed by the landscape plans and shown for location only on grading plans. Plantable, segmental walls shall be designed, reviewed and constructed by the grading plans and landscaped/irrigated through project landscape plans. All plans must be approved by the City Engineer and a pre-construction meeting held, prior to the start of any improvements.

14. All storm drain systems shall be designed and installed to the satisfaction of the City Engineer.

15. Grading and drainage facilities shall be designed to adequately accommodate the local storm water runoff and shall be in accordance with the City's Engineers Manual and as directed by the City Engineer.

16. Sediment, silt, grease, trash, debris, and/or pollutants shall be collected on-site and disposed of in accordance with all state and federal requirements, prior to stormwater discharge either off-site or into the City drainage system.

17. The development shall comply with all applicable regulations established by the United States Environmental Protection Agency (USEPA) as set forth in the National Pollutant Discharge Elimination System (N.P.D.E.S.) permit requirements for urban run-off and storm water discharge and any regulations adopted by the City pursuant to the N.P.D.E.S. regulations or requirements. Further, the applicant shall file a Notice of Intent with the State Water Resources Control Board to obtain coverage under the N.P.D.E.S. General Permit for Storm Water Discharges Associated with Construction Activity and shall implement a Storm Water Pollution Prevention Plan (SWPPP) concurrent with the commencement of grading activities. The SWPPP shall include both construction and post construction pollution prevention and pollution control measures and shall identify funding mechanisms for post construction control measures. The developer shall comply with all the provisions of the Clean Water Program during and after all phases of the development process, including but not limited to: mass grading, rough grading, construction of street and landscaping improvements, and construction of dwelling units. The applicant shall design the Project's storm drains and other drainage facilities to include Best Management Practices to minimize non-point source pollution, satisfactory to the City Engineer.

**Planning:**

18. This Regular Coastal Permit approves only the following: the construction of a 2-lane bridge and related improvements over the San Luis Rey River at Pacific Street. Any substantial modification in the design or layout shall require a revision to the Regular Coastal Permit.

19. This Regular Coastal Permit shall expire on May 3, 2008, unless implemented as required by the Zoning Ordinance or unless a time extension is granted by the Community Development Commission.

20. Failure to meet any conditions of approval for this development shall constitute a violation of the Regular Coastal Permit.

21. Unless expressly waived, all current zoning standards and City ordinances and policies in effect at the time building permits are issued are required to be met by this project. The approval of this project constitutes the applicant's agreement with all statements in the Description and Justification, Management Plan and other materials and information submitted with this application, unless specifically waived by an adopted condition of approval.

22. The owner of the property shall be responsible for trash abatement on the site, and shall keep the site free of litter, trash and other nuisances.

23. Elevations and plans shall be substantially the same as those approved by the Community Development Commission. These shall be shown on plans submitted to the Public Works Department and Planning Division.

24. Prior to issuance of grading permits, the proposed project plans shall incorporate a drainage control plan that would collect and divert all surface drainage from the bridge, parking lots 6, 7, and 9, and reconstructed streets, to "in-line" fossil filters or other acceptable filtration/treatment devices prior to discharge to the existing storm drain system or adjacent surface waters.

25. Concurrent with project construction, impacts to wetlands and other "waters of the U.S." to below a level of significance, wetland creation and/or restoration would be conducted at a suitable nearby site in the San Luis Rey River.

26. Concurrent with project construction, impacts to coastal sage scrub shall be mitigated by preservation and/or creation of coastal sage scrub habitat at a 2:1 ratio.

27. Archaeological monitoring is required during construction of the revegetation area.

28. The design of the bridge and retaining walls shall include decorative treatment of concrete surfaces and other bridge features, and landscaping shall be installed adjacent to the parking lots in the Harbor Village area.

29. All ground disturbing activities shall be monitored by a qualified archaeologist. If cultural resources are found, work shall be halted until the resource can be assessed for significance or eligibility for local, state, or federal listing.

PASSED AND ADOPTED by the Oceanside Community Development Commission of the City of Oceanside this 3rd day of May 2006 by the following vote:

AYES:

NAYS:

ABSENT:

ABSTAIN:

_____
Chairman

ATTEST:

_____
Secretary

APPROVED AS TO FORM:
OFFICE OF THE CITY ATTORNEY

by _____
General Counsel

ITEM NO. 33

STAFF REPORT

CITY OF OCEANSIDE

DATE: November 5, 2003

TO: Chairman and Members of the Community Development Commission/ Oceanside Small Craft Harbor District

FROM: Planning Department

SUBJECT: **CONSIDERATION OF RESOLUTIONS CERTIFYING A FINAL ENVIRONMENTAL IMPACT REPORT (FEIR) AND APPROVING A LOCAL COASTAL PROGRAM AMENDMENT (LCPA-200-03) AND REGULAR COASTAL PERMIT (RC-207-03) FOR THE PACIFIC STREET BRIDGE PROJECT LOCATED AT PACIFIC STREET AND THE SAN LUIS REY RIVER -- CITY OF OCEANSIDE**

## SYNOPSIS

The item under consideration is a Local Coastal Program Amendment and Regular Coastal Permit for the Pacific Street Bridge Project. The subject site is the San Luis Rey River and bridge approaches north and south of the river. Staff is recommending that the Community Development Commission/Oceanside Small Craft Harbor District adopt the attached resolutions approving the project and certifying the final EIR.

## BACKGROUND

Roadway improvements across the mouth of the San Luis Rey River have been installed since the early 1900s. Since the 1970s, the improvements have been designed to be washed out during flood events and have been asphalt over sand with some riprap and concrete protection. Between 1980 and 1998, the road has washed out and has been reconstructed eight times. The current improvements were installed in accordance with the U.S. Army Corps of Engineers (ACOE) San Luis Rey Flood Control specifications and are designed to wash out during periods of significant rain in order to avoid upriver flooding. Though continually subject to washout, the Pacific Street Crossing provides a critical second access to the Oceanside Harbor and Marina Area. The only permanent crossing to the Harbor Area is via Harbor Drive, from Interstate 5 (I-5) and Coast Highway to the east of the project.

The area of the proposed project improvements consists of the streambed of the San Luis Rey River which is contained within riprap banks, existing roadways on either side of the river, and parking lot west of and adjacent to Harbor Village. Private land uses in the

immediate project area are the North Coast Village condominiums located on the south side of the project site, the private leaseholds in the Harbor Area, and the Marina Del Mar condominiums located to the north of the subject site.

Land Use and Zoning: The bridge and southern approach improvements are within Subdistricts 10 and 5 of the Redevelopment Project Area. The northern approach to the bridge, including improvements to South Harbor Drive and the Harbor Village parking lot, are within the boundaries of the Oceanside Small Craft Harbor Precise Plan and Subdistrict 6D of the "D" Downtown District.

The Oceanside Small Craft Harbor Precise Plan, which is a sub-element of the City's Local Coastal Program, covers the area north of the San Luis Rey River and specifies "actions and physical improvements which are necessary and feasible in upgrading both the appearance and utility of the Harbor." In the project area, the short-range plan primarily proposes landscape and bike path improvements and also indicates an "improved 36-foot-wide street for North Pacific Street. The long-range plan shows more extensive improvements to Harbor Beach and Village.

Circulation improvements for the short-range plan are addressed in Section 3.3.4 of the Harbor Precise Plan and are oriented primarily toward correcting existing flow problems, clarifying circulation patterns, resolving circulation/parking conflicts, and providing improved directional and information signage. The Harbor Precise Plan anticipated that the Pacific Street crossing would be upgraded, but did not contemplate a permanent bridge at this location due to funding constraints at the time the Precise Plan was written.

Project Description: The proposed project is to replace the existing at-grade Pacific Street crossing of the San Luis Rey River with a bridge designed to safely pass floodwaters of a 100-year storm and provide a permanent second access to the Oceanside Harbor. The bridge would be approximately 650 feet in length by 50 feet in width, within a right-of-way of 60 feet. It is designed to accommodate one traffic lane in each direction, a combination shoulder and bike lane on both sides of the road, as well as sidewalks on both sides. The bridge would be a box girder design supported by piers placed in the river floodplain. The project would also consist of transition road improvements on both ends of the bridge to meet existing roads. In addition, the project includes removal of the existing at-grade roadway and culverts.

The bridge would incorporate a slight "s-curve" design. A 1-foot wide by 2.25-foot high concrete parapet would extend on each side along the length of the bridge. A decorative railing would be added above the parapet. Low wattage decorative streetlights with shielded elements would be installed along both sides of the bridge.

For the approach to the bridge from the south, the improvements would begin approximately 289 feet south of the midpoint of the existing curve in Pacific Street, and would include raising the elevation of Pacific Street approximately 3 feet, in order to meet the elevation of the bridge. Approximately 1,928 square feet of right-of-way would be required from the North Coast Village condominiums homeowners association.

West of the bridge, along the north side of the North Coast Village condominiums, the existing Pacific Street alignment would be maintained for access to the condominiums. For improved access to the beach, a sidewalk would be added on the north side of the access road.

At its north end, the bridge would be approximately 17 feet above the existing elevation of Harbor Drive South. The bridge is at this height to allow the 100-year floodwaters to be conveyed below the box girders of the bridge. The existing Harbor Drive South would also need to be reconstructed so that it rises to meet the bridge elevation. This reconstruction would extend approximately 490 feet east of the bridge, to approximately 595 feet west of the bridge. Approximately 4210 cubic yards of fill would be imported and a concrete retaining wall up to 10 feet high would be constructed on the north side of the elevated roadway using a Mechanically Stabilized Embankment (MSE) process. The design of the bridge and approaches would be enhanced with decorative treatment and landscaping for visual compatibility with its setting within a river corridor.

Stop signs would be placed at the north end of the bridge for both east and westbound approaches on Harbor Drive South. Sidewalks would be installed on both sides of the reconstructed portion of Harbor Drive South. The existing 16 on-street parking spaces located along the north side of Harbor Drive South would be re-installed within the reconstructed portion of the road. As with the existing condition, no parking would be permitted on the south side of Harbor Drive South.

Local Coastal Program Amendment: A Local Coastal Program Amendment (LCPA) is required as a permanent crossing of the San Luis Rey River at Pacific Street was not contemplated in the City's Local Coastal Program and the Oceanside Harbor Small Craft Harbor Precise Plan.

Regular Coastal Permit: This project is also situated within the coastal zone and requires a coastal permit. Under the provisions of the Local Coastal Plan, the project site is designated as Zone 10 – Open Space.

**Environmental Determination:** Staff has determined that the project will not have a significant adverse environmental impact. A Final Environmental Impact Report (FEIR) has been completed in accordance with the State Guidelines of the California Environmental Quality Act (CEQA), and an Environmental Assessment will be issued in accordance with the National Environmental Policy Act (NEPA), due to the use of Federal money for the bridge. The Community Development Commission will consider the accuracy and adequacy of the FEIR; and, if appropriate, the report will be certified for compliance with the California Environmental Quality Act (CEQA).

The FEIR evaluates three project Alternatives: Alternative 1 – the proposed project which is a mid-channel alignment, Alternative 2 – a bridge alignment that approximates the existing at-grade crossing, and the No Project Alternative. Construction of the bridge will result in temporary and permanent impacts to less than 1 acre of wetlands that will be

mitigated to a level of insignificance by re-creating wetlands. Overall, it was found that removing the at-grade crossing and allowing water to flow underneath the permanent bridge will result in a significant benefit to biological resources, such as fish and birds, at the mouth of the river.

## ANALYSIS

The proposed bridge is consistent with the Redevelopment Plan and provisions of the Local Coastal Program (LCP). The Small Craft Harbor Precise Plan sub-element of the LCP will need to be amended to include construction of a permanent bridge. When adopted in the mid-1980s, the Precise Plan did not contemplate the construction of a permanent crossing due to lack of funds at that time, but acknowledged that the temporary crossing would be maintained. Were the temporary at-grade crossing to be washed out in the future, it is uncertain if the Wildlife Agencies would grant permits for its reconstruction, as it constricts tidal flushing at the mouth of the river, which is crucial for certain fish species. Construction of the bridge will greatly enhance the environment at the mouth of the San Luis Rey River and will provide a needed permanent second access point to the Harbor for emergency and economic purposes.

## COMMISSION OR COMMITTEE REPORTS

The Redevelopment Design Review Committee (RDRC) reviewed the project at its September 26, 2003, meeting and recommended approval of the design.

The Redevelopment Advisory Committee (RAC) reviewed the project at its November 5, 2003, meeting. Any recommendations will be presented to the Commission in writing by staff prior to the meeting.

## FISCAL IMPACT

All project costs are 80 percent federally funded by a Federal Highway Administration grant of $10,000,000 administered through Caltrans and 20 percent or $2,500,000 of local funding for a total project cost of $12.5 million. The federal portion will be reimbursed to the City through Caltrans. Thoroughfare fees will be used for the local share.

## CITY ATTORNEY'S ANALYSIS

Pursuant to Oceanside Zoning Ordinance Article 4102, the Community Development Commission/Oceanside Small Craft Harbor District is authorized to hold a public hearing on this project's applications. Consideration of the project should be based on the evidence presented at the hearing. After conducting the public hearing, the Commission shall approve, conditionally approve, or disapprove the project. The resolution has been reviewed and approved as to form by the City Attorney.

## RECOMMENDATION

Staff recommends that the Community Development Commission/Oceanside Small Craft Harbor District adopt the resolutions certifying a Final Environmental Impact Report (EIR) and approving a Local Coastal Program Amendment (LCPA 200-03) and Regular Coastal Permit (RC-207-03).

PREPARED BY:

Jerry Hittleman
Senior Environmental Planner

SUBMITTED BY:

Steven R. Jepsen
Executive Director

JH/vnm

**REVIEWED BY:**

Michelle Skaggs Lawrence, Assistant to the City Manager
Mike Blessing, Deputy City Manager
Gerald S. Gilbert, Planning Director

**ATTACHMENTS:**

1. Resolution approving the project
2. Resolution amending the Local Coastal Program
3. Resolution certifying the Final EIR
4. Site Plan
5. Final EIR (separately distributed)

OCEANSIDE COMMUNITY DEVELOPMENT COMMISSION

RESOLUTION NO. 03-R663-3

A RESOLUTION OF THE OCEANSIDE COMMUNITY DEVELOPMENT COMMISSION APPROVING A REGULAR COASTAL PERMIT (RC-207-03) FOR A PERMANENT BRIDGE LOCATED AT PACIFIC STREET AND THE SAN LUIS REY RIVER – APPLICANT: CITY OF OCEANSIDE

WHEREAS, on November 5, 2003, the Community Development Commission held a duly noticed public hearing to consider an application for a Regular Coastal Permit (RC-207-03) for the Pacific Street Bridge Project located at Pacific Street and the San Luis Rey River;

WHEREAS, the applicant is the City of Oceanside;

WHEREAS, there is hereby imposed on the subject development project certain dedications, reservations and other exactions pursuant to State law and City ordinance;

WHEREAS, studies and investigations made by the Community Development Commission reveal the following facts:

FINDINGS:

**For the Regular Coastal Permit:**

1. The proposed bridge is consistent with the policies of the Local Coastal Program as implemented through the City Zoning Ordinance. In addition, the project will not substantially alter or impact existing public views of the coastal zone area.
2. The proposed bridge will not obstruct any existing or planned public beach access; is needed for a second permanent access point to the Harbor, and will enhance the environment of the San Luis Rey River, therefore, the project is in conformance with the policies of Chapter 3 of the Coastal Act.

WHEREAS, the Community Development Commission finds that an environmental impact report has been prepared pursuant to the State Guidelines of the California Environmental Quality Act.

NOW, THEREFORE, the Community Development Commission of the City of Oceanside does resolve that Regular Coastal Permit (RC-207-03) is hereby approved subject to the following conditions:

**Engineering:**

1. All right-of-way alignments, street dedications, exact geometrics and widths shall be dedicated and improved as required by the City Engineer.
2. Design and construction of all improvements shall be in accordance with standard plans, specifications of the City of Oceanside and subject to approval by the City Engineer.
3. Prior to issuance of a grading permit a phasing plan for the construction of public and private improvements including landscaping, shall be approved by the City Engineer.
4. The approval of the project shall not mean that the proposed closure, vacation or abandonment of any public street, right-of-way, easement or facility indicated on the development plan is granted or guaranteed to the developer. The developer is responsible for applying for all closures, vacations and abandonments as necessary. The application(s) shall be reviewed and approved or rejected by the City under separate process(es) per codes, ordinances, and policies in effect at the time of the application.
5. The developer shall monitor, supervise and control all construction and construction-supportive activities, so as to prevent these activities from causing a public nuisance, including but not limited to, insuring strict adherence to the following:
   a) Dirt, debris and other construction material shall not be deposited on any public street or within the City's storm water conveyance system.
   b) All grading and related site preparation and construction activities shall be limited to the hours of 7 a.m. to 6 p.m., Monday through Friday, and on Saturday from 7 a.m. to 6 p.m. for work that is not inherently noise-producing unless otherwise extended by the City and all work should utilize the latest technology for quiet equipment. All on-site construction staging areas shall be as far as possible (minimum 100 feet) from any existing residential development. Because construction noise may still be intrusive in the evening or on holidays, the City of Oceanside Noise Ordinance also prohibits "any disturbing excessive, or offensive noise which causes discomfort or annoyance to reasonable persons of normal sensitivity."

c) The construction site shall accommodate the parking of all motor vehicles used by persons working at or providing deliveries to the site.

6. The developer shall contract with an engineering firm to perform R-value testing of the existing pavement on the adjacent streets. The Developer shall submit a study that shall analyze whether the existing pavement meets current City standards/traffic indices. If the study concludes that the pavement does not meet City standards/traffic indices, rehabilitation/mitigation recommendations shall be included in the study and the Developer shall reconstruct the street per the recommendations or to the satisfication of the City Engineer.

7. Sight distance requirements at all street intersections shall conform to the intersection sight distance criteria as provided by the California Department of Transportation Highway Design Manual.

8. A traffic control plan shall be submitted to and approved by the City Engineer prior to the start of work within open City rights-of-way. Traffic control during construction of streets that have been opened to public traffic shall be in accordance with construction signing, marking and other protection as required by the CalTrans Traffic Manual. Traffic control during construction adjacent to or within all public streets must also meet CalTrans standards.

9. Any existing broken pavement, concrete curb, gutter or sidewalk or any damaged during construction of the project, shall be repaired or replaced as directed by the City Engineer.

10. Grading and drainage facilities shall be designed to adequately accommodate the local storm water runoff and shall be in accordance with the City's Engineers Manual and as directed by the City Engineer.

11. The applicant shall obtain any necessary permits and clearances from all public agencies having jurisdiction over the project due to its type, size, or location, including but not limited to the U.S. Army Corps of Engineers, California Department of Fish and Game, U.S. Fish and Wildlife Service and/or San Diego Regional Water Quality Control Board

//////////

(including NPDES), San Diego County Health Department, prior to the issuance of grading permits.

12. Prior to any grading of any part of the tract or project, a comprehensive soils and geologic investigation shall be conducted of the soils, slopes, and formations in the project. All necessary measures shall be taken and implemented to assure slope stability, erosion control, and soil integrity. No grading shall occur until a detailed grading plan, to be prepared in accordance with the Grading Ordinance and Zoning Ordinance, is approved by the City Engineer.

13. An erosion control plan and precise grading and private improvement plan shall be prepared, reviewed, secured and approved prior to the issuance of any building permits. The plan shall reflect all pavement, flatwork, landscaped areas, special surfaces, curbs, gutters, medians, striping, signage, footprints of all structures, walls, drainage devices and utility services. Parking lot striping and any on-site traffic calming devices shall be shown on all precise grading and private improvement plans.

14. Landscaping plans, including plans for the construction of walls, fences or other structures at or near intersections, must conform to intersection sight distance requirements. Landscape and irrigation plans for disturbed areas must be submitted to the City Engineer prior to the issuance of a preliminary grading permit and approved by the City Engineer prior to the issuance of building permits. Frontage and median landscaping shall be installed prior to the issuance of any building permits. Project fences, sound or privacy walls and monument entry walls/signs shall be designed, reviewed and constructed by the landscape plans and shown for location only on grading plans. Plantable, segmental walls shall be designed, reviewed and constructed by the grading plans and landscaped/irrigated through project landscape plans. All plans must be approved by the City Engineer and a pre-construction meeting held, prior to the start of any improvements.

15. All storm drain systems shall be designed and installed to the satisfaction of the City Engineer.

16. Grading and drainage facilities shall be designed to adequately accommodate the local storm water runoff and shall be in accordance with the City's Engineers Manual and as directed by the City Engineer.

17. Sediment, silt, grease, trash, debris, and/or pollutants shall be collected on-site and disposed of in accordance with all state and federal requirements, prior to stormwater discharge either off-site or into the City drainage system.

18. The development shall comply with all applicable regulations established by the United States Environmental Protection Agency (USEPA) as set forth in the National Pollutant Discharge Elimination System (N.P.D.E.S.) permit requirements for urban run-off and storm water discharge and any regulations adopted by the City pursuant to the N.P.D.E.S. regulations or requirements. Further, the applicant shall file a Notice of Intent with the State Water Resources Control Board to obtain coverage under the N.P.D.E.S. General Permit for Storm Water Discharges Associated with Construction Activity and shall implement a Storm Water Pollution Prevention Plan (SWPPP) concurrent with the commencement of grading activities. The SWPPP shall include both construction and post construction pollution prevention and pollution control measures and shall identify funding mechanisms for post construction control measures. The developer shall comply with all the provisions of the Clean Water Program during and after all phases of the development process, including but not limited to: mass grading, rough grading, construction of street and landscaping improvements, and construction of dwelling units. The applicant shall design the Project's storm drains and other drainage facilities to include Best Management Practices to minimize non-point source pollution, satisfactory to the City Engineer.

**Planning:**

19. This Regular Coastal Permit approves only the following: the construction of a 2-lane bridge and related improvements over the San Luis Rey River at Pacific Street. Any substantial modification in the design or layout shall require a revision to the Regular Coastal Permit.

20. This Regular Coastal Permit shall expire on November 5, 2005, unless implemented as required by the Zoning Ordinance or unless a time extension is granted by the Community Development Commission.

21. Failure to meet any conditions of approval for this development shall constitute a violation of the Regular Coastal Permit.

22. Unless expressly waived, all current zoning standards and City ordinances and policies in effect at the time building permits are issued are required to be met by this project. The approval of this project constitutes the applicant's agreement with all statements in the Description and Justification, Management Plan and other materials and information submitted with this application, unless specifically waived by an adopted condition of approval.

23. The owner of the property shall be responsible for trash abatement on the site, and shall keep the site free of litter, trash and other nuisances.

24. Elevations and plans shall be substantially the same as those approved by the Community Development Commission. These shall be shown on plans submitted to the Public Works Department and Planning Department.

25. Prior to issuance of grading permits, the proposed project plans shall incorporate a drainage control plan that would collect and divert all surface drainage from the bridge, parking lots 6, 7, and 9, and reconstructed streets, to "in-line" fossil filters or other acceptable filtration/treatment devices prior to discharge to the existing storm drain system or adjacent surface waters.

26. Concurrent with project construction, impacts to wetlands and other "waters of the U.S." to below a level of significance, wetland creation and/or restoration would be conducted at a suitable nearby site in the San Luis Rey River.

27. Concurrent with project construction, impacts to coastal sage scrub shall be mitigated by preservation and/or creation of coastal sage scrub habitat at a 2:1 ratio.

28. Archaeological monitoring is required during construction of the revegetation area.

////////

29. The design of the bridge and retaining walls shall include decorative treatment of concrete surfaces and other bridge features, and landscaping shall be installed adjacent to the parking lots in the Harbor Village area.

30. All ground disturbing activities shall be monitored by a qualified archaeologist. If cultural resources are found, work shall be halted until the resource can be assessed for significance or eligibility for local, state, or federal listing.

PASSED AND ADOPTED by the Oceanside Community Development Commission of the City of Oceanside this 5th day of November, 2003 by the following vote:

AYES: JOHNSON, SANCHEZ, FELLER, CHAVEZ, WOOD

NAYS: None

ABSENT: None

ABSTAIN: None

Chairman

ATTEST:

Secretary

APPROVED AS TO FORM:
OFFICE OF THE CITY ATTORNEY

by

General Counsel

**RESOLUTION NO.**

**RESOLUTION OF THE COMMUNITY DEVELOPMENT COMMISSION OF THE CITY OF OCEANSIDE TO AMEND THE LOCAL COASTAL PROGRAM AND OCEANSIDE SMALL CRAFT HARBOR PRECISE PLAN TO REFLECT A NEW PERMANENT BRIDGE AT PACIFIC STREET AND THE SAN LUIS REY RIVER AND TO REQUEST CALIFORNIA COASTAL COMMISSION CERTIFICATION OF SAID AMENDMENT**

**(City of Oceanside –Applicant)**
**(LCPA-200-03)**

WHEREAS, the California Coastal Act (Public Resources Code §30000, et seq.) (the "Coastal Act") requires that the City adopt a Local Coastal Program (LCP) which meets the requirements of the Coastal Act at the local level and implements its provisions and policies;

WHEREAS, on January 25, 1985, the California Coastal Commission ("Commission") approved with suggested modifications, the City's Land Use Plan ("LUP") and, pursuant to Public Resources Code §30512.2, found the City's LUP to be consistent with the policies and requirements of Chapter 3 of the Coastal Act and to meet the basic state goals specified in Public Resources Code §30001.5;

WHEREAS, on November 5, 2003, the Community Development Commission conducted a duly noticed public hearing as prescribed by law to amend the Local Coastal Program (LCPA-200-03) as specified within Exhibit "A", and as attached hereto and incorporated herein by reference;

WHEREAS, an environmental impact report was prepared by the Resource Officer of the City of Oceanside for this project pursuant to the California Environmental Quality Act of 1970 and the State Guidelines thereto as amended to date and hereby approved by the City Council in conjunction with this application; and

WHEREAS, the Community Development Commission finds that the amendment to Local Coastal Program Amendment (LCPA-200-03) conforms with and is adequate to carry out the land use plan and Oceanside Small Craft Harbor Precise Plan of the Local Coastal Program.

/////////

NOW, THEREFORE, the Oceanside Community Development Commission of the City of Oceanside DOES RESOLVE as follows:

1. Pursuant to Public Resources Code §30510(a), the Oceanside Community Development Commission hereby certifies that the Local Coastal Program Amendment (LCPA-200-03) is intended to be carried out in a manner fully in conformity with the Coastal Act.

2. Pursuant to the California Environmental Quality Act of 1970, and the State Guidelines thereto amended to date, a Notice of Exemption has been issued for the project by the Resource Officer for the City of Oceanside.

3. Pursuant to Coastal Commission Local Coastal Program Regulations §13551(b), this amendment shall take effect upon Coastal Commission approval.

4. Notice is hereby given that the time within which judicial review must be sought on the decision is governed by CCP Section 1094.6.

PASSED AND ADOPTED by the Oceanside Community Development Commission this 5th day of November, 2003, by the following vote:

AYES:

NAYS:

ABSENT:

ABSTAIN:

Chairman

ATTEST:

APPROVED AS TO FORM:

Secretary

General Counsel

# PACIFIC STREET BRIDGE LOCAL COASTAL PLAN/SMALL CRAFT HARBOR PRECISE PLAN AMENDMENT

The following language shall be inserted into Sections 3.3.4 and 3.4.3 of the Oceanside Small Craft Harbor Precise Plan (July 1979):

The City of Oceanside will replace the existing at-grade Pacific Street Crossing of the San Luis Rey River with a bridge designed to safely pass floodwaters of a 100-year storm and provide a permanent second access to the Oceanside Harbor. The bridge will be approximately 650 feet in length by 50 feet in width, within a right-of-way of 60 feet and is designed to accommodate one traffic lane in each direction and a combination shoulder and bike lane on both sides of the road, as well as sidewalks on both sides. The bridge will incorporate a slight "s-curve" design as it crosses the river and would intersect Harbor Drive South approximately 528 feet east of the existing intersection.

The project also consists of transition road improvements on both ends of the bridge to meet existing roads. West of the bridge, along the north side of the North Coast Village Condominiums, the existing Pacific Street alignment would be maintained for access to the condominiums and pedestrian access to the beach. At its north end the bridge would be approximately 10 feet above the existing Harbor Drive South so that the flood waters of a 100-year storm could be conveyed below the bottom of the box girders of the bridge. The existing Harbor Drive South would be reconstructed so that it rises to meet the bridge elevation. The reconstruction would extend from approximately 490 feet east of the bridge to approximately 595 feet west of the bridge. Sidewalks will be installed on both sides of the reconstructed portion of Harbor Drive South, including along the entire south side of the street.

The design of the bridge and roadway approaches will be enhanced with decorative treatment and landscaping. The bridge project will also include drainage improvements from the bridge and reconstructed streets that would be directed to urban runoff filtration devices and vegetated swales or "french drains" where feasible.

OCEANSIDE COMMUNITY DEVELOPMENT COMMISSION

RESOLUTION NO.

A RESOLUTION OF THE COMMUNITY DEVELOPMENT COMMISSION OF THE CITY OF OCEANSIDE CERTIFYING THE FINAL ENVIRONMENTAL IMPACT REPORT AND APPROVING THE MITIGATION MONITORING AND REPORTING PROGRAM FOR THE PACIFIC STREET BRIDGE PROJECT

(City of Oceanside – Applicant)

WHEREAS, a Final Environmental Impact Report (FEIR) was prepared and circulated for public and agency review and proper notification was given in accordance with the California Environmental Quality Act; and

WHEREAS, on November 5, 2003 a duly advertised public hearing before the Community Development Commission of the City of Oceanside was held on the content of the Final Environmental Impact Report (FEIR) and the Mitigation Monitoring and Reporting Program (MMRP); and

WHEREAS, studies and investigations made by this Commission and in its behalf reveal the following facts:

For the Final Environmental Impact Report (FEIR):

1. The Final Environmental Impact Report (FEIR) was completed in compliance with the provisions of the California Environmental Quality Act (CEQA).

2. There are certain significant environmental effects detailed in the Final Environmental Impact Report (FEIR) which have been avoided or substantially lessened by the establishment of measures which are detailed in the Environmental Findings, attached to this Resolution as Exhibit "A," and incorporated by this reference.

3. The Final Environmental Impact Report (FEIR) and Mitigation and Monitoring and Reporting Program (MMRP), were presented to the Community Development Commission, and the Community Development Commission reviewed and considered the information contained in these documents prior to making a decision on the project. The Final

Environmental Impact Report (FEIR) and Mitigation and Monitoring and Reporting Program (MMRP) have been determined to be accurate and adequate documents which reflect the independent judgment and analysis of the Community Development Commission.

NOW, THEREFORE, the Community Development Commission of the City of Oceanside does resolve as follows:

1. The Final Environmental Impact Report (FEIR) for the Pacific Street Bridge project is CERTIFIED.

2. Pursuant to Public Resources Code Section 21081.6, the Community Development Commission adopts the Mitigation Monitoring and Reporting Program (MMRP), as contained in the Final Environmental Impact Report (FEIR), which is attached as Exhibit "B" to this Resolution and incorporated by this reference, and finds and determines that this program is designed to ensure compliance with the mitigation measures during project implementation.

3. Notice is HEREBY GIVEN that the time within which judicial review must be sought on this decision is governed by the provisions of the California Environmental Quality Act (CEQA).

PASSED and ADOPTED by the Community Development Commission of the City of Oceanside, California this 5th day of November, 2003 by the following vote:

AYES:

NAYS:

ABSENT:

ABSTAIN:

CHAIRMAN

ATTEST:

APPROVED AS TO FORM:
OFFICE OF THE CITY ATTORNEY

SECRETARY

GENERAL COUNSEL

# FINDINGS THAT CHANGES OR ALTERATIONS HAVE BEEN REQUIRED IN OR INCORPORATED INTO THE PROPOSED PACIFIC STREET BRIDGE PROJECT WHICH MITIGATE OR AVOID ALL SIGNIFICANT ENVIRONMENT EFFECTS

The California Environmental Quality Act (CEQA) requires that no public agency shall approve or carry out a project that identifies one or more significant environmental effects of the project unless the public agency makes one or more written findings for each of those significant effects, accompanied by a brief explanation of the rationale for each finding. The possible findings are:

(1) Changes or alterations have been required in, or incorporated into, the project which mitigate or avoid the significant environmental effects on the environment.

(2) Those changes or alterations are within the responsibility and jurisdiction of another public agency and have been or can or should be, adopted by that other agency.

(3) Specific economic, legal, technological, or other consideration, including considerations for the provision of employment opportunities for highly trained workers, make infeasible the mitigation measures or alternatives identified in the EIR.

(Sec. 21081 of the California Environmental Quality Act)

CEQA further requires that, where the decision of the public agency allows the occurrence of significant effects which are identified in the final EIR, but are not at least substantially mitigated, the agency shall state in writing the specific reasons to support its action based on the final EIR and/or other information in the record (Sec. 15093 of the State CEQA Guidelines).

The following Findings have been prepared by the City as candidate findings to be made by the decision making body.

## FINDINGS FOR THE PROPOSED PACIFIC STREET BRIDGE PROJECT

The following Findings are made relative to the conclusions of the Final Environmental Impact Report/Environmental Assessment (EIR/EA) for the Pacific Street Bridge Project (the project) (SCH #2001121110). The Final EIR/EA is incorporated by reference herein.

### INTRODUCTION:

The City of Oceanside proposes to replace the existing at-grade Pacific Street Crossing of the San Luis Rey River with a bridge designed to safely pass floodwaters of a 100-year storm and provide a permanent second access to the Oceanside Harbor area. The project site is bounded by the beach and the Pacific Ocean on the west, Harbor Drive South and the Oceanside Harbor and Marina on the north, an existing North County Transit District Railroad Bridge on the east, and the existing Pacific Street on the south. The bridge would be approximately 200 meters (650 feet) in length by 15.25 meters (50 feet) in width, within a right-of-way width of 18.3 meters (60 feet) and would be designed to accommodate one traffic lane in each direction and a combination shoulder and bike lane on both sides of the road, as well as sidewalks on both sides. The project would also consist of transition road improvements on both ends of the bridge to meet existing

roads. In addition, the project includes the removal of the existing at-grade roadway and the re-creation of coastal wetlands. City staff has recommended selection of the bridge alignment identified in the EIR/EA as Alternative 1, Mid-Channel Alignment.

The EIR/EA concludes that implementation of the project could result in potentially significant impacts associated with Land Use and Community Resources, Wetlands and Other "Waters of the U.S.," Biological Resources, Floodplain, Cultural Resources, Visual Resources, Geology and Soils, and Construction. The project includes measures that would avoid or mitigate to below a level of significance these potentially significant impacts.

**FINDINGS:**

According to CEQA and the CEQA Guidelines, "no public agency shall approve or carry out a project for which an EIR has been completed which identifies one or more significant environmental effects of the project unless the public agency makes one or more written findings for each of those significant effects, accompanied by a brief explanation of the rationale of each finding" (CEQA §15091). The following findings are relative to the conclusions of the Final EIR/EA for Alternative 1, Mid-Channel Alignment, of the proposed Pacific Street Bridge project.

A. ***Public Resources Code Section 21081(a)(1):*** Pursuant to Public Resources Code Section 21081(a), the decision maker, having reviewed and considered the information contained in the Final EIR/EA for the project, the public record and the administrative record, finds pursuant to CEQA and the State CEQA Guidelines, that changes or alterations have been incorporated into the project which avoid or substantially lessen the significant environmental effects as identified in the Final EIR/EA with respect to Land Use and Community Resources, Wetlands and Other "Waters of the U.S.," Biological Resources, Floodplain, Cultural Resources, Visual Resources, Geology and Soils, and Construction.

1. Land Use and Community Resources

*Impact:* The Oceanside Small Craft Harbor Precise Plan, Oceanside Local Coastal Program, and San Luis Rey River Specific Plan do not state that a bridge is planned to be constructed over the San Luis Rey River.

*Finding:* To mitigate potential impacts to land use and community resources to below a level of significance, these city plans and programs are being amended to remove any conflict with the proposed project.

2. Water Quality

*Impact:* The proposed bridge and realignment of portions of Harbor Drive South and Pacific Street could increase storm water runoff due to an increase in impervious surfaces.

*Finding:* To mitigate potential impacts to water quality to below a level of significance, the proposed project would incorporate a drainage control plan that would collect and divert all surface drainage from the bridge, parking lots 6, 7, and 9, and reconstructed streets, to "in line" fossil filters or other acceptable

filtration/treatment devices prior to discharge to the existing storm drain system or adjacent surface waters.

3. Wetlands and Other "Waters of the U.S."

*Impact:* Potentially significant direct impacts of 0.779 hectare (1.925 acres) and indirect impact of 0.348 hectare (0.86 acre) to wetlands and other "waters of the U.S." would result from construction of the bridge and removal of the existing Pacific Street Crossing.

*Finding:* To mitigate potential significant impacts to wetlands and other "waters of the U.S." to below a level of significance, wetland creation and/or restoration would be conducted at a suitable nearby site in the San Luis Rey River.

4. Biological Resources

*Impact:* Potentially significant impacts to would occur to 61.26 square meters (659.42 square feet) of coastal sage scrub vegetation, as well as the impact to wetlands noted above.

*Finding:* To mitigate potential impacts to biological resources to below a level of significance, coastal sage scrub would be preserved or created at a 2:1 ratio.

5. Floodplain

*Impact:* Potentially significant floodplain impacts would result from construction within a 100-year floodplain.

*Finding:* To mitigate potential floodplain impacts to below a level of significance, the bridge would be designed and constructed to safely pass the 100-year without upstream or downstream impacts in accordance with the Hydrology and Hydraulics Report prepared for the project.

6. Cultural Resources

*Impact:* Potentially significant impacts could occur to cultural resources that might be present in an upstream area where habitat restoration for mitigation of wetland impacts would occur.

*Finding:* To mitigate potential impacts to cultural resources to below a level of significance, archaeological monitoring is required during construction of the revegetation area.

7. Visual Resources

*Impact:* Potentially significant impacts to visual resources would result from changes in the scenic quality of the San Luis Rey River.

*Finding:* To mitigate potential impacts to visual resources to below a level of significance, the design of the bridge and retaining walls would include decorative treatment of concrete surfaces and other bridge features, and landscaping would be installed adjacent to the parking lots in the Harbor

Village area.

8. Geology and Soils

*Impact:* Potentially significant impacts to geology and soils could result from seismic activity, soil scour, and corrosive soils.

*Finding:* To mitigate potential impacts to geology and soils to below a level of significance, the design and construction standards and procedures contained in the Preliminary Foundation Report prepared for the project would be incorporated into the project design.

9. Construction

*Impact:* Potentially significant temporary impacts could occur during project construction affecting land use and community resources, air quality, noise, water quality, wetlands and "waters of the U.S.," biological resources, threatened and endangered species, public health and safety, and traffic circulation and parking.

*Finding:* To mitigate potential temporary construction impacts to below a level of significance, the following mitigation measures will be implemented during construction of the project:

Land use and community resources. Adverse temporary construction-related land use impacts will be mitigated through implementation of the Parking Management Plan in Appendix J of the EIR/EA and the preparation and implementation of a traffic control plan, which are included as part of the proposed project.

Air quality. Measures to minimize the emission of fugitive dust, including $PM_{10}$ and $PM_{2.5}$, will be incorporated into the project to be applied at staging areas as well as at the project site areas.

Noise. Noise abatement measures will be incorporated into the proposed project to avoid or minimize anticipated temporary construction noise impacts to nearby residents, other sensitive receptors, and sensitive wildlife species. These measures are listed in the EIR/EA and will include limitations on hours of work, notification to nearby residents prior to noise-generating activities such as pile driving or pavement breaking, use of reduced-noise equipment, compliance with City and Caltrans noise control standards, limitation on nighttime work, and avoidance of pile driving during breeding and foraging seasons of sensitive bird species.

Water quality. Mitigation measures are included as part of the project design to minimize potential water quality impacts from construction activities. These measures are listed in the EIR/EA and will include obtaining an National Pollutant Discharge Elimination System (NPDES) Storm Water Permit that requires implementation of a Storm Water Pollution Prevention Plan (SWPPP). The SWPPP will include best management practices (BMPs) for erosion and runoff control, rules for handling hazardous materials such as

petroleum products during construction, and containment of spills or leaks of vehicle fuels and lubricants.

Wetlands and "waters of the U.S." and biological resources. Mitigation measures to avoid or minimize impacts to sensitive biological areas and resources are listed in the EIR/EA and will include a contractor education program, flagging of sensitive areas, restrictions on equipment staging and refueling areas, limitations on night lighting and construction noise levels, and control of invasive species.

Threatened and endangered species. Construction will be avoided during the breeding season and/or foraging seasons of listed species to preclude potential temporary construction-related noise impacts to those species. Additional measures to avoid, minimize, or mitigate for impacts to threatened and endangered species are the same as those described for nonlisted sensitive species in Section 3.17.8 of the project EIR/EA.

Public health and safety. Because staging areas for the project would be located in proximity to nearby water bodies, the mitigation measures to avoid potential public health and safety impacts are included in the EIR/EA. These measures include contractor training and education, containment of hazardous materials storage, fueling, and maintenance areas, and compliance with adopted rules and regulations for use, storage, transport, and disposal of hazardous materials.

Traffic circulation and parking. Adverse temporary construction-related traffic circulation and parking impacts will be mitigated through implementation of the Parking Management Plan in Appendix J of the EIR/EA and the preparation and implementation of a traffic control plan, which are included as part of the proposed project.

B. ***Public Resources Code Section 21081(a)(2):*** The decision maker, having independently reviewed and considered the information contained in the Final EIR/EA for the project and the public record, finds that there are no changes or alterations needed for the project to avoid or substantially lessen the significant environmental impacts that are *within the responsibility and jurisdiction of another public agency and have been, or can and should be, adopted by that other agency.*

C. ***Public Resources Code Section 21081(a)(3):*** The decision maker, having independently reviewed and considered the information contained in the EIR/EA for the project and the public record, finds that no *specific economic, social, technological or other considerations, including considerations for the provision of employment opportunities for highly trained workers, make infeasible the mitigation measures or alternatives identified in the EIR/EA.*

# Table 5.7-1. Pacific Street Bridge Project Mitigation Monitoring and Reporting Program Checklist

| Mitigation Measure No. | Mitigation Measure | Method of Verification | Timing of Verification | | | | Responsible Party | Completed | | Comments |
|---|---|---|---|---|---|---|---|---|---|---|
| | | | Plans & Specs | Pre Const. | During Const. | Post Const. | | Initials | Date | |
| | **Land Use and Community Resources** | | | | | | | | | |
| 1 | The City shall amend the Harbor Precise Plan and the Oceanside LCP to eliminate any conflicts with the proposed project, since these documents did not foresee that a bridge at this location would be the most feasible means to improve access to the Harbor. This would include amending Section 3.4.3 of the Harbor Precise Plan to state that the bridge would be aligned at the mid-point of Harbor Drive South. | City Council approval of the amendments | | X | | | City DPW and Planning Department | | | |
| | **Wetlands and Other "Waters of the U.S.** | | | | | | | | | |
| 1 | Direct temporary impacts to vegetated wetlands shall be compensated at a minimum 1:1 mitigation ratio; whereas, direct permanent impacts to vegetated wetlands shall be compensated at a minimum 4:1 mitigation ratio. Therefore, to compensate for the direct permanent impacts of 0.002 hectare (0.004 acre) to wetlands and other "waters of the U.S." under Alternative 1, at least 0.003 hectare (0.008 acre) of wetland creation and/or restoration at a suitable site shall be conducted and preserved. The temporary direct impacts from trestle construction and dismantling, and from removal of the at-grade Pacific Street crossing (0.777 hectare [1.921 acres]) would be mitigated at a 1:1 ratio via restoration as needed, in place.<br><br>Indirect (shading) impacts on vegetated wetlands will be compensated at a 1:1 ratio; whereas, no mitigation will be required for shading of open water and beach sand. Because no mitigation is required for the permanent effect of shading on water and beach sand, the mitigation required for shading impacts (0.174 hectare [0.43 acre]) is less than the area affected by shading. | Preparation of wetland mitigation plan approved by ACOE | | X | X | | City DPW | | | |

| Mitigation Measure No. | Mitigation Measure | Method of Verification | Timing of Verification | | | | Responsible Party | Completed | | Comments |
|---|---|---|---|---|---|---|---|---|---|---|
| | | | Plans & Specs | Pre Const. | During Const. | Post Const. | | Initials | Date | |
| | Mitigation for shading impacts will be satisfied via additional wetland creation or restoration at a suitable site. | | | | | | | | | |
| 2 | Because the riparian vegetation upstream of the study area, immediately east of I-5, provides nesting habitat for the least Bell's vireo (ACOE 1987), restoration/creation of riparian habitat along this portion of the San Luis Rey River would be preferred. Mitigation in or adjacent to the study area may provide additional habitat for the vireo and form a corridor connecting existing vireo habitat near I-5 with the riparian woodland and scrub in the project area. In particular, the San Luis Rey River Flood Control Project (ACOE 1987) identifies areas immediately upstream of I-5 (see Figure 3.7-4 in the project EIR/EA) that would be appropriate for restoration and/or creation of riparian habitat. Creation of marsh may include salvaging any individuals of southwestern spiny rush to be impacted during construction (see Section 2.6 of the project EIR/EA). In addition, a small area suitable for riparian restoration exists downstream (west) of the railroad bridge. The small patches of arundo scrub within the project area could be removed and replaced with willow cuttings. | Preparation of wetland mitigation plan approved by ACOE | | X | X | | City DPW | | | |
| 3 | The final mitigation plan shall be reviewed and approved by the resource agencies as part of the federal and state wetland permits that shall be obtained prior to the initiation of construction. Restoration/creation of riparian habitat shall be accomplished prior to or concurrent with commencement of project construction. A 5-year maintenance and monitoring plan shall also be prepared and implemented to measure success of the mitigation and allow sign-off by the City and resource agencies upon completion. In addition to monitoring the habitat restoration/creation site, the project area shall be surveyed annually for 5 years and results | | | | | | | | | |

| Mitigation Measure No. | Mitigation Measure | Method of Verification | Timing of Verification | | | | Responsible Party | Completed | | Comments |
|---|---|---|---|---|---|---|---|---|---|---|
| | | | Plans & Specs | Pre Const. | During Const. | Post Const. | | Initials | Date | |
| | noted on changes to observable conditions and wildlife species present in the lagoon during project construction and post-construction. | | | | | | | | | |
| | **Biological Resources** | | | | | | | | | |
| 1 | To compensate for the project's impacts to 0.350 hectare (0.864 acre) of wetlands from the bridge pier pilings and bridge shading, off-site mitigation of at least 0.177 hectare (0.438 acre) of wetland creation and/or restoration at a suitable site shall be conducted and preserved. Restoration in-place, as needed for temporary impacts would also be required. Noxious weeds, primarily giant reed and tamarisk, will be eradicated as a component of the restoration to prevent re-infestation or spread of these species into temporarily impacted areas. | Preparation of wetland mitigation plan approved by ACOE | | X | X | | City DPW | | | |
| 2 | Mitigation for the small amount of disturbed CSS to be permanently impacted by Alternative 1 shall include restoration and/or preservation of CSS at a 2:1 ratio. To compensate for the permanent loss of 61.26 square meters (659.42 square feet) of CSS, at least 122.52 square meters (1,318.84 square feet) of existing CSS habitat shall be preserved. As an alternative, a suitable site with disturbed CSS, nonnative grassland, or ruderal habitat could be restored or converted to CSS and preserved. In either case, the sage scrub area proposed for mitigation should be situated in proximity to a large area of intact native habitat (e.g., buffer to the San Luis Rey River wetland habitats) so that greater benefits to wildlife and plants may be realized over the long term. Restoration in-place for the temporary impact from construction of the trestle to disturbed CSS shall also be required. A 5-year maintenance and monitoring plan shall also be prepared and implemented. | Preparation of restoration plan approved by USFWS | | X | X | | City DPW | | | |
| 3 | A number of ruderal areas exist along the southern edge of the river, adjacent to the railroad bridge and existing disturbed CSS. Restoration may be accomplished by | Preparation of restoration plan approved by USFWS | | X | X | | City DPW | | | |

| Mitigation Measure No. | Mitigation Measure | Method of Verification | Timing of Verification | | | | Responsible Party | Completed | | Comments |
|---|---|---|---|---|---|---|---|---|---|---|
| | | | Plans & Specs | Pre Const. | During Const. | Post Const. | | Initials | Date | |
| | removing exotic vegetation from the ruderal areas and disturbed CSS and seeding with a CSS seed mix. In addition, this may be accomplished in cooperation with the proposed CSS restoration for the San Luis Rey Recreational Trail Project immediately east of the study area. The restoration plan for CSS must be reviewed and approved by the resource agencies. | | | | | | | | | |
| 4 | Impacts to sensitive plant species would be limited to a few individuals of southwestern spiny rush, for which no mitigation is required. It is recommended, however, that spiny rush be transplanted to the wetland mitigation site for the project as part of the wetland restoration effort. Preconstruction clearance surveys shall be conducted prior to project construction for those species with a moderate or higher potential for occurrence as listed in Table 3.8-1 of the EIR/EA. If new sensitive plants are detected in the project area, mitigation may be required and the mitigation plan would need to be reviewed and approved by the resource agencies. | Preparation of restoration plan approved by USFWS | | X | X | | City DPW | | | |
| 5 | Preconstruction clearance surveys must be conducted again prior to the initiation of construction to obtain updated information on the status of relevant sensitive wildlife in the project area. These surveys must be conducted by a qualified biologist and must include the project area and all suitable habitat within 150 meters (500 feet) of any construction or staging areas to determine the presence or absence of California gnatcatchers, snowy plover, California least tern, light-footed clapper rail, least Bell's vireo, southwestern willow flycatchers, California brown pelican, and other surveys as determined to be necessary by the USFWS and CDFG. If sensitive wildlife remains absent from the project area, then no mitigation would be required. However, if sensitive wildlife is detected in the project area, efforts to avoid and/or minimize impacts | Report on the presence of sensitive wildlife | | X | | | City DPW<br>Project biologist | | | |

| Mitigation Measure No. | Mitigation Measure | Method of Verification | Timing of Verification | | | | Responsible Party | Completed | | Comments |
|---|---|---|---|---|---|---|---|---|---|---|
| | | | Plans & Specs | Pre Const. | During Const. | Post Const. | | Initials | Date | |
| | along with possible appropriate mitigation would be required and the mitigation plan would need to be reviewed and approved by the resource agencies. | | | | | | | | | |
| 6 | A permanent drainage plan shall be implemented to divert ongoing runoff from the newly constructed bridge and ramps into a filtration/storm water treatment system before release into the river channel. | Preparation of drainage plan | X | | | X | City DPW<br>Construction contractor<br>Construction inspector | | | |
| 7 | Selective fencing (or barriers) and signs shall be installed, if needed, to discourage heavy human usage underneath the bridge to prevent degradation of riparian habitats. | Installation inspection and letter of verification | X | | | X | City DPW | | | |
| 8 | Permanent lighting designed to be a part of the completed bridge structure shall use relatively low intensity lights and be directed toward the road surface and away from adjacent sensitive habitat areas. | Installation inspection and letter of verification | X | | | X | City DPW | | | |
| | **Floodplain** | | | | | | | | | |
| 1 | Bridge plans and specifications and the footing design shall be in accordance with the Hydrology and Hydraulics Report prepared for the project (WEST 2001) and shall be approved by Caltrans. Specifically, the bridge shall be constructed at an elevation to permit passage of the 100-year flood with a minimum clearance of 0.305 meter (1 foot), and the footings and piles shall be installed to an adequate depth to resist scour. | Project plans, designs and specifications shown final construction plans | X | X | X | | City DPW<br>Construction contractor<br>Construction inspector | | | |
| | **Cultural Resources** | | | | | | | | | |
| 1 | Because most of the area in the potential biological mitigation site within the San Luis Rey River floodplain was not visible during surveys for cultural resources, archaeological monitoring shall be conducted if construction activities for habitat restoration occur in this area. If previously unrecorded cultural resources are found during construction, then ground-disturbing activities in the vicinity of the find shall be halted and the find assessed by a qualified archaeologist. If the find is determined to be a historic or archaeological resource, then additional mitigation measures | Archaeologist inspection and report on presence of historic or archaeological resources, if resources are present | X | X | X | | City DPW<br>Archaeological monitor | | | |

| Mitigation Measure No. | Mitigation Measure | Method of Verification | Timing of Verification | | | | Responsible Party | Completed | | Comments |
|---|---|---|---|---|---|---|---|---|---|---|
| | | | Plans & Specs | Pre Const. | During Const. | Post Const. | | Initials | Date | |
| | shall be required. | | | | | | | | | |
| | **Visual Resources** | | | | | | | | | |
| 1 | Visual impacts would be avoided by use of decorative treatment of concrete surfaces and other bridge features (see EIR/EA Figures 2.3-1 and 2.3-2), and by proposed landscaping (see EIR/EA Figures 2.3-1 and 2.3-3) to soften the effect of the retaining walls when viewed from the Harbor Village area. These features shall be incorporated into the plans and specifications of the bridge and associated road improvements. The City Arts Commission shall review and make recommendations on project design plans and related improvements within the project area. | Bridge construction plans and specifications shown on final construction plans; project landscaping shown on final landscape plan | X | X | X | X | City DPW<br>Construction contractor<br>Construction inspector | | | |
| 2 | All landscaping shall be installed within 30 days of completion of construction. | Installation and inspection prior to acceptance of improvements | | | | X | City DPW<br>Construction contractor<br>Construction inspector | | | |
| | **Geology and Soils** | | | | | | | | | |
| 1 | The design and construction standards and procedures set forth in the *Preliminary Foundation Report* shall be incorporated into the project design to avoid potential geologic impacts due to seismicity and soils. | Design and standards shown on final project plans and specifications; inspections during construction to verify implementation | X | | X | | City DPW<br>Construction Contractor<br>Construction inspector | | | |
| | **Construction** | | | | | | | | | |
| 1 | Land Use and Community Resources<br>Temporary construction-related land use impacts shall be mitigated through the implementation of the Parking Management Plan (PMP) in Appendix J of the EIR/EA (Willdan 2002) and the preparation and implementation of a traffic control plan (TCP). | Preparation of PMP and TCP | X | | X | | City DPW<br>Construction Contractor<br>Construction inspector | | | |
| 2 | Climate and Air Quality<br>The following measures shall be incorporated into the project to minimize the emission of | Inspections during site preparation, | | | X | | Construction contractor | | | |

| Mitigation Measure No. | Mitigation Measure | Method of Verification | Timing of Verification | | | | Responsible Party | Completed | | Comments |
|---|---|---|---|---|---|---|---|---|---|---|
| | | | Plans & Specs | Pre Const. | During Const. | Post Const. | | Initials | Date | |
| | fugitive dust, including $PM_{10}$ and $PM_{2.5}$. These measures are to be applied at staging areas as well as at the project site areas.<br><br>*Site Preparation, Demolition, and Construction*<br>1. Minimize land disturbance;<br>2. Use watering trucks to minimize dust;<br>3. Cover trucks when hauling dirt;<br>4. Stabilize the surface of dirt piles if not removed immediately;<br>5. Limit vehicular paths in unpaved areas;<br>6. Sweep paved streets at least once per day where there is evidence of dirt that has been carried onto the roadway.<br>7. Cover trucks when transferring materials;<br>8. Use dust suppressants on traveled paths that are not paved;<br>9. Minimize unnecessary vehicular and machinery activities; and<br>10. Sweep paved streets at least once per day where there is evidence of dirt that has been carried onto the roadway. | demolition, and construction | | | | | Construction inspector | | | |
| | *Postconstruction*<br>1. Remove unused material;<br>2. Remove dirt piles; and<br>3. Revegetate any undeveloped land disturbed by construction. | Inspection prior to acceptance of improvements | | | | X | City DPW<br>Construction contractor<br>Construction inspector | | | |
| 3 | Noise<br>The following noise abatement measures shall be incorporated into the proposed project to avoid or minimize anticipated temporary construction noise impacts to nearby residents, other sensitive receptors, and sensitive wildlife species.<br><br>1. Construction shall be limited to the hours of 7 a.m. to 7 p.m., Monday through Friday, and not on federal, state or city holidays, wherever feasible. Work required at other times shall be authorized by a special permit from the City, and shall be subject to any noise limitations imposed by the permit. | Notifications of use of pile driving equipment and of planned road demolition work | | X | | | City DPW<br>Construction contractor | | | |

| Mitigation Measure No. | Mitigation Measure | Method of Verification | Timing of Verification | | | | Responsible Party | Completed | | Comments |
|---|---|---|---|---|---|---|---|---|---|---|
| | | | Plans & Specs | Pre Const. | During Const. | Post Const. | | Initials | Date | |
| | 2. At least 2 weeks prior to each pile driving phase of construction, residents of the Marina del Mar and North Coast Village condominiums, and occupants of commercial buildings within 150 meters (500 feet) of the pile driving area shall be notified of the planned pile driving operations. The notice shall describe the project and advise the probable schedule and duration of pile driving operations. For pile driving within 150 meters (500 feet) of any residence, project construction specifications shall require that noise blankets be installed around the section of the pile driver where the most noise is generated, or shall require installation of a temporary noise barrier between the pile driver and nearby residences. If pile driving noise at residential receptors exceeds 75 dBA $L_{eq}$ for more than 3 consecutive hours, the contractor shall provide additional noise abatement.<br><br>3. At least 2 weeks prior to the start of road work adjacent to the North Coast Village condominiums, the residents shall be notified of the planned construction work. The notices shall describe the project and advise the probable schedule and duration of nearby work. | | | | | | | | | |
| | 4. Traffic control devices used within 150 meters (500 feet) of residences shall be powered by batteries, solar power, or other silent devices, and not by internal combustion engines.<br><br>5. Staging areas for the storage and maintenance of construction equipment shall be arranged so that the noisiest activities are located at the farthest practicable distance from residences. Where feasible, stockpiled materials should be located to provide noise | Inspection during construction; preparation of a work plan for nighttime construction, if needed | X | | X | | City DPW<br>Construction contractor<br>Construction inspector | | | |

| Mitigation Measure No. | Mitigation Measure | Method of Verification | Timing of Verification | | | | Responsible Party | Completed | | Comments |
|---|---|---|---|---|---|---|---|---|---|---|
| | | | Plans & Specs | Pre Const. | During Const. | Post Const. | | Initials | Date | |
| | barriers between noisy activities and nearby commercial and residential receptors. Equipment maintenance and other noisy activities shall not occur in the project area between 7 p.m. and 7 a.m.<br><br>6. Noise from construction equipment and activities shall be controlled by noise control measures that ensure compliance with the City of Oceanside standard that identifies the maximum noise level for individual pieces of construction equipment at 85 dBA $L_{eq}$ at 30.5 meters (100 feet), and Caltrans Standard Specifications Sections 7 and 42 and Standard Special Provisions for limits on construction noise levels.<br><br>7. As required by Caltrans Standard Specification 7-1.01I, each internal combustion engine shall be equipped with a muffler of a type recommended by the manufacturer. No internal combustion engine shall be operated on the project without said muffler.<br><br>8. Heavy construction machinery with rubber tires shall be used in place of machinery equipped with tracks, if feasible.<br><br>9. Prior to the scheduling of any nighttime work, contractors shall prepare a work plan and schedule for review and approval by the City Engineer. The work plan shall include a noise analysis of the proposed nighttime work and the noise abatement measures that would be used to minimize impacts to residents. Nighttime work shall be limited to no more than 3 consecutive days in any 1 week. | | | | | | | | | |

| Mitigation Measure No. | Mitigation Measure | Method of Verification | Timing of Verification | | | | Responsible Party | Completed | | Comments |
|---|---|---|---|---|---|---|---|---|---|---|
| | | | Plans & Specs | Pre Const. | During Const. | Post Const. | | Initials | Date | |
| | 10. Temporary indirect noise impacts on wildlife within wetlands and sensitive habitats shall be avoided by prohibiting pile driving during the breeding season for most wetland dependent bird species and the foraging season for the California least tern (April 1 through September 15). If avoidance is infeasible, then temporary noise barriers surrounding or mounted on the pile driving equipment shall be incorporated. Noise monitoring shall also be conducted to ensure that the noise barriers avoid impacts to sensitive wildlife. To avoid noise from pumping or de-watering, electric power shall be used to operate pumps, rather than use of diesel engines. Alternatively, if electric power is not available, continuously operating diesel engines shall be fitted with "hospital grade" mufflers and, where feasible, a temporary barrier shall be erected adjacent to the engine. | | | | | | | | | |
| 4 | Water Quality<br>The following mitigation measures are included as part of the project design to minimize potential water quality impacts from construction activities.<br><br>1. Prior to commencement of construction, construction contractors shall obtain an NPDES Storm Water Permit for general construction activity. The NPDES permit requires development and implementation of an SWPPP that describes the BMPs that would be employed before, during, and after construction to minimize erosion and runoff from construction activities. Typical BMPs to reduce pollutant discharges include revegetation, and construction and postconstruction erosion and sediment controls such as earthen berms, bales of rice straw, sand or gravel bags, and fiber rolls. | NPDES General Construction Storm Water Permit received from RWQCB | X | X | | | City DPW | | | |

| Mitigation Measure No. | Mitigation Measure | Method of Verification | Timing of Verification | | | | Responsible Party | Completed | | Comments |
|---|---|---|---|---|---|---|---|---|---|---|
| | | | Plans & Specs | Pre Const. | During Const. | Post Const. | | Initials | Date | |
| | 2. Prior to construction, all parties involved shall meet to discuss BMPs and the SWPPP prepared by the contractor pursuant to the NPDES Permit. The construction contractor, in consultation with the City, shall be responsible for implementing required BMPs. The construction manager shall be responsible for monitoring and maintenance of BMPs to ensure that they are working properly, until the construction area has been permanently stabilized. | | | | | | | | | |
| | 3. To avoid impacts to water quality from sedimentation during construction activities, including excavation, the project shall implement BMPs such as, but not be limited to, the following:<br><br>a. Use of controlled construction staging areas to minimize ground disturbance, erosion, and runoff into the river channel or harbor;<br>b. Use of fiber rolls along the eastern edge (lagoon side) of the at-grade roadbed to prevent sedimentation and debris falling into the open water channel during removal of the at-grade road and drainage culverts;<br>c. Use of erosion control devices such as fiber rolls near the base of the soil stockpiles in the staging areas to prevent sloughing of materials into the channel or lagoon;<br>d. All soil to be stockpiled for a period of greater than 30 days shall be protected with secured tarps or tackifiers to prevent wind erosion of the material into the lagoon;<br>e. Sediment control measures (e.g., organic polymer tackifier) to prevent rainfall from contacting exposed soil surfaces, and erosion control measures (e.g., gravel bags) to prevent eroded material from leaving the construction | BMPs shown on final project plans and specifications | | | X | | City DPW<br>Construction contractor<br>Construction manager | | | |

| Mitigation Measure No. | Mitigation Measure | Method of Verification | Timing of Verification | | | | Responsible Party | Completed | | Comments |
|---|---|---|---|---|---|---|---|---|---|---|
| | | | Plans & Specs | Pre Const. | During Const. | Post Const. | | Initials | Date | |
| | or staging areas;<br>f. Use of erosion control devices such as silt fences below the toe of exposed or erodible slopes such as the fill areas for Harbor Drive South and Pacific Street.<br>g. Use of stabilized construction entrances to prevent transportation of mud or earth onto public streets<br><br>4. Strict construction site rules for handling hazardous materials shall be implemented to prevent spills and provide controlled storage areas away from the river and harbor. Petroleum products, concrete, asphalt, or other coating materials, and other hazardous materials shall be prevented from contaminating fill soils or beach areas, or entering surface waters.<br><br>5. Potential contamination of surface water quality of the lagoon due to spills or leaks of vehicle fuels and lubricants or other noxious chemicals shall be avoided by implementing BMPs such as:<br>a. Any equipment or vehicles driven and/or operated within or adjacent to the lagoon or channel shall be properly maintained to minimize leaks;<br>b. Stationary equipment such as motors located near the lagoon shall be positioned over drip pans;<br>c. Refueling activities, and storage of fuels, lubricants, and other potential contaminants shall be located at the staging area as specified in the construction drawings. Plastic and sand bags shall be placed on the ground around the refueling area to contain any surface runoff. On a weekly basis an absorbent material shall be used to absorb contaminants and shall be removed off-site to a proper disposal facility; | | | | | | | | | |

| Mitigation Measure No. | Mitigation Measure | Method of Verification | Timing of Verification | | | | Responsible Party | Completed | | Comments |
|---|---|---|---|---|---|---|---|---|---|---|
| | | | Plans & Specs | Pre Const. | During Const. | Post Const. | | Initials | Date | |
| | d Concrete washouts will be implemented as necessary to prevent concrete from entering water bodies or the existing drainage system;<br>e. A surface boom will be placed in open water around the perimeter of the bridge and trestle area to prevent the spread of surface pollutants.<br><br>5. Turbidity in the river caused by construction processes (pile driving and pile casing placement) will be limited through the implementation of the following BMPs:<br>a. Pile driving and removal will occur as much as practical during low flow conditions in the river;<br>b. The existing culverts under the Pacific Street low flow crossing will, to the greatest extent practical, be blocked during pile driving and removal operations depending on tidal movements and river flow conditions. | | | | | | | | | |
| 5 | Biological Resources<br>1. Provision shall be made to inform the construction contractor(s), prior to the bidding process, about the biological constraints of this project. The contractor(s) shall be responsible for impacts to sensitive biological resources beyond those identified in this report that occur as a direct result of construction activities. All sensitive habitat areas to be avoided shall be clearly marked on project maps provided to the contractor. These areas shall be designated as "no construction" zones. These areas shall be flagged by a qualified biologist prior to the onset of construction activities. In some cases, resources may need to be fenced or otherwise protected from direct or indirect impacts. | Project plans with "no construction" zones clearly marked; project biologist's letter certifying proper flagging installation; qualified biologist's letter certifying completion of contractor education program | X | X | | | City DPW<br>Construction contractor<br>Project biologist<br>Qualified biologist | | | |

| Mitigation Measure No. | Mitigation Measure | Method of Verification | Timing of Verification | | | | Responsible Party | Completed | | Comments |
|---|---|---|---|---|---|---|---|---|---|---|
| | | | Plans & Specs | Pre Const. | During Const. | Post Const. | | Initials | Date | |
| | 2. A contractor education program shall be implemented to ensure that contractors and all construction personnel are fully informed of the biological resources associated with this project. This program shall focus on (a) the purpose for resource protection; (b) contractor identification of sensitive resource areas in the field (e.g., areas delineated on maps and by flags or fencing); (c) sensitive construction practices; (d) protocol to resolve conflicts that may arise at any time during the construction process; and (e) ramifications of noncompliance. This program shall be conducted by a qualified biologist and shall be a requirement for all construction personnel. | | | | | | | | | |
| | 3. No equipment staging and refueling areas shall be located outside of existing developed areas as shown in Figure 3.7-1 of the EIR/EA.<br><br>4. Excessive erosion, sedimentation, and potential contamination of surface water quality due to spills or leaks of vehicle fuels and lubricants shall be prevented as part of the NPDES permits required by the project for storm water management. As described in Section 3.6, Water Quality, the NPDES permit will require preparation of an SWPPP for the project, which would include appropriate BMPs. The project would also require an MS4 permit for point source discharges of storm water from collected bridge runoff and if dewatering of bridge footing sediments within the surface waters is conducted, and the General Storm Water Permit that is required for construction of a bridge over a water body. The construction contractor, in consultation with the City, shall be responsible for implementing required BMPs. The construction manager shall be responsible | Delineation of staging areas on grading plans; grading plan review certification by project biologist; NPDES General Construction Storm Water Permit received from RWQCB; inspection during construction; equipment use timing restrictions clearly indicated on all grading and construction plans. | X | X | X | | City DPW<br>Construction contractor<br>Construction manager<br>Construction inspector<br>Project biologist | | | |

| Mitigation Measure No. | Mitigation Measure | Method of Verification | Timing of Verification | | | | Responsible Party | Completed | | Comments |
|---|---|---|---|---|---|---|---|---|---|---|
| | | | Plans & Specs | Pre Const. | During Const. | Post Const. | | Initials | Date | |
| | for monitoring and maintenance of BMPs to ensure that they are working properly until the construction area has been permanently stabilized.<br><br>The plan shall include (a) drainage control, catchment, and filtration within the staging areas to prevent runoff into the river or harbor; (b) use of fiber rolls along the eastern edge of the at-grade roadbed to prevent sediment and debris from falling into the open water channel during removal of the at-grade road and drainage culverts; (c) stockpiling of soil in nonsensitive areas away from the river channel or harbor whenever possible; (d) use of secured tarps or tackifiers for all soil to be stockpiled for a period of greater than 30 days to prevent wind erosion of the material into the lagoon; (e) use of erosion control devices such as fiber rolls near the base of the soil stockpiles in the staging areas to prevent sloughing of materials into the channel or lagoon; (f) sediment control measures (e.g., organic polymer tackifier) to prevent rainfall from contacting exposed soil surfaces, and erosion control measures (e.g., gravel bags) to prevent eroded material from leaving the construction or staging areas; and (g) use of erosion control devices such as fiber rolls below the toe of exposed or erodible slopes such as the fill areas for Harbor Drive South and Pacific Street.<br><br>5. Construction is expected to be undertaken during daylight; however, if nighttime construction is necessary, lighting shall be diverted away from any native habitat and shall consist of low-sodium or similar lighting equipped with shields to focus light downward onto the appropriate subject. | | | | | | | | | |

| Mitigation Measure No. | Mitigation Measure | Method of Verification | Timing of Verification | | | | Responsible Party | Completed | | Comments |
|---|---|---|---|---|---|---|---|---|---|---|
| | | | Plans & Specs | Pre Const. | During Const. | Post Const. | | Initials | Date | |
| | 6. Removal of the existing at-grade road and drainage culverts would partially offset the project's permanent impacts. Removal of the existing asphalt road base and pipe culverts and dredging of a small pilot channel through the sand roadbed would be considered components of the total mitigation plan for the Pacific Street Bridge project. The short-term temporary impacts from this removal shall be mitigated by implementing the following measures: (a) fiber rolls shall be installed along the eastern edge of the at-grade road to prevent sediment and debris from falling into the lagoon; and (b) a qualified biologist shall be present during construction to monitor the work and to ensure that no marsh or other wetland habitats are impacted by the road removal. | | | | | | | | | |
| | 7. In-place revegetation of marsh habitat, where temporarily impacted by trestle piers, shall be implemented upon completion of construction. A revegetation plan shall be prepared and implemented for temporary wetland impacts.<br><br>8. A revegetation plan shall be prepared and implemented for all areas where sensitive habitat beyond flagged limits is inadvertently impacted during construction. The plan shall impose mitigation ratios twice those noted in Tables 3.7-2 and 3.7-4 of the EIR/EA. The plan shall detail appropriate native plant mixes and methods for reestablishing native vegetation consistent with preexisting vegetation communities. Revegetation effort should exclude use of plants on lists A or B of the California Exotic Pest Plant Council list of "Exotic Pest Plants of Greatest | Preparation of revegetation plan prepared and approved by ACOE and CDFG; completion of 5-year maintenance and monitoring program | | | | X | City DPW<br>Qualified biologist | | | |

| Mitigation Measure No. | Mitigation Measure | Method of Verification | Timing of Verification | | | | Responsible Party | Completed | | Comments |
|---|---|---|---|---|---|---|---|---|---|---|
| | | | Plans & Specs | Pre Const. | During Const. | Post Const. | | Initials | Date | |
| | Ecological concern in California" (October 1999). Plan preparation and implementation shall be coordinated by a qualified biologist in consultation with the City and wildlife agencies. A 5-year maintenance and monitoring plan shall also be prepared and implemented to measure success of the mitigation and allow final sign-off by the City, resource agencies, FHWA, and the Department, upon completion. | | | | | | | | | |
| | 9. Mitigation for temporary indirect noise impacts on wildlife within the sensitive wetland and habitats should include avoidance of pile driving during the breeding season for most wetland dependent bird species and the foraging season for the California least tern (March 1 through September 15). If avoidance is infeasible, then temporary noise barriers surrounding or mounted on the pile driving equipment should be incorporated. To avoid noise from pumping or dewatering, electric power should be used to operate pumps to avoid the use of diesel engines. Alternatively, if electric power is not available, continuously operating diesel engines should be fitted with "hospital grade" mufflers, and where feasible, a temporary barrier should be erected adjacent to the engine. No mitigation is required for the potential temporary impact to pelicans that roost within the mouth of the San Luis Rey River. However, it is recommended that informal consultation be conducted with USFWS as part of the 404 permit process, and design or construction measures be considered and incorporated, if needed, to assure that impacts to day roosting pelicans remain minimal. | | | | | | City DPW | | | |
| | | | | | | | Construction contractor | | | |
| | | | | | | | Construction manager | | | |
| | | | | | | | Construction inspector | | | |
| | | | | | | | Project biologist | | | |

| Mitigation Measure No. | Mitigation Measure | Method of Verification | Timing of Verification | | | | Responsible Party | Completed | | Comments |
|---|---|---|---|---|---|---|---|---|---|---|
| | | | Plans & Specs | Pre Const. | During Const. | Post Const. | | Initials | Date | |
| | 10. Construction specifications to avoid impacts from invasive species shall include the following measures: Clean all construction equipment before moving to site; control spread of invasive plants during project construction; use only weed-free mulches and weed-free sods in specifications; plant appropriate native plants as much as practicable; specify invasive plant species control as part of one-year establishment monitoring period; do not specify known invasive plant species in erosion control mix or any other planting materials used in the project (federal funds cannot be used in such projects); avoid importing top soils unless absolutely necessary by salvaging existing top soils after existing invasive plants have been treated (store salvaged top soils as a berm along project in lieu of silt fencing where possible); and inspect and treat the salvaged top soils for new growth of any invasives during the project. | Project plans and specifications require cleaning and inspection of equipment. Preparation of revegetation plan and 5-year maintenance and monitoring program | | | | | City DPW<br>Construction contractor<br>Project biologist | | | |
| 6 | Threatened and Endangered Species<br>Construction shall be avoided during the breeding season and/or foraging seasons of listed species to preclude potential temporary construction-related noise impacts to those species. Additional measures to avoid, minimize, or mitigate for impacts to threatened and endangered species are the same as those described for nonlisted sensitive species in Section 3.17.8 of the EIR/EA. | Grading and construction plans with seasonal restrictions clearly indicated | | | X | | City DPW | | | |
| 7 | Public Health and Safety<br>1. Contractor training shall be conducted prior to the start of construction, and education shall emphasize the need for proper hazardous materials management due to the proximity of the San Luis Rey River and Oceanside Harbor to the project staging and construction areas. | Training evaluation form submitted to DPW upon completion of training | | X | | | City DPW | | | |

| Mitigation Measure No. | Mitigation Measure | Method of Verification | Timing of Verification | | | | Responsible Party | Completed | | Comments |
|---|---|---|---|---|---|---|---|---|---|---|
| | | | Plans & Specs | Pre Const. | During Const. | Post Const. | | Initials | Date | |
| | 2. Hazardous materials storage, fueling, and maintenance areas shall be located within the staging areas as far as possible from the nearby water bodies.<br><br>3. Fueling and maintenance activities shall only be performed in designated areas within the staging areas. No fueling or maintenance activities shall be allowed in the construction zone.<br><br>4. Secondary containment and proper storage shall be utilized for all hazardous materials so that the potential of a spill migrating to the nearby water bodies is reduced or eliminated.<br><br>5. All other rules and regulations governing the use, storage, management, transportation, and disposal of hazardous materials (institutional controls) shall be followed by the construction contractor to protect human health and the environment. | Project plans and specifications show location of all staging, storage, fueling, and maintenance areas. Contractor oversight and routine inspections for compliance | | | X | | City CPW<br>Construction contractor<br>Construction inspector | | | |
| 8 | Traffic Circulation and Parking<br>1. Temporary construction-related impacts shall be minimized through implementation of the Parking Management Plan in Appendix J of the EIR/EA (Willdan 2002).<br><br>2. All construction that affects movement of traffic along any public street or public parking area as a result of lane closure, narrowed lane width, detours, or erection of barriers or other traffic control devices shall be detailed in a traffic control plan to be approved by the City DPW and shall be implemented during project construction. | Preparation of PMP and TCP | X | | X | | City DPW<br>Construction contraction<br>Construction inspector | | | |

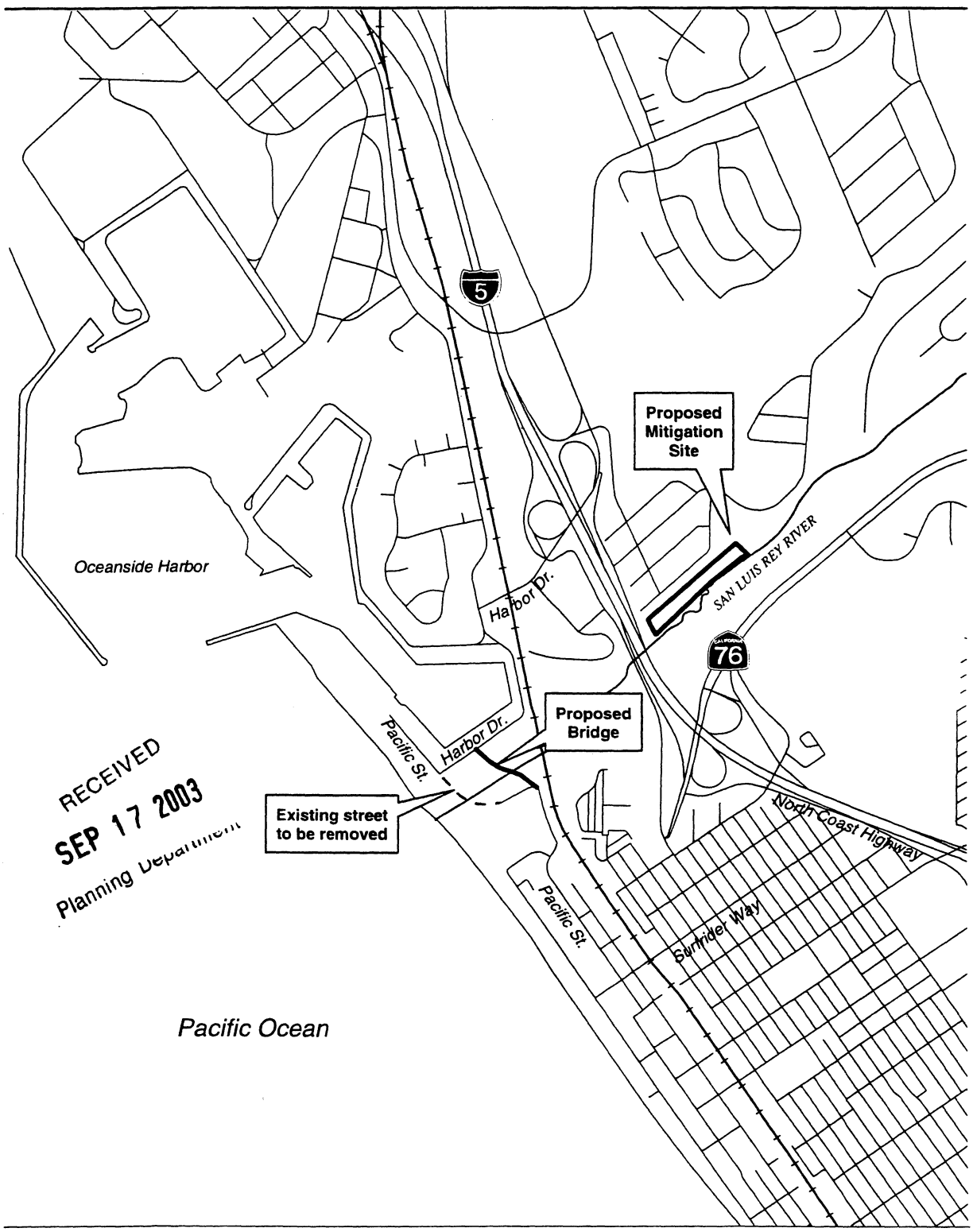


RECEIVED
SEP 17 2003
Planning Department

Source: SanGIS, SANDAG.

1500 750 0 1500 Feet

NORTH

Scale: 1:18000; 1 inch = 1500 feet

**Pacific Street Bridge Vicinity Map**

*GIS\00102 Pacific Street\basemap.mxd SP83fF6 (P. Moreno) 8/27/03*

RECEIVED
SEP 17 2003
Planning Department

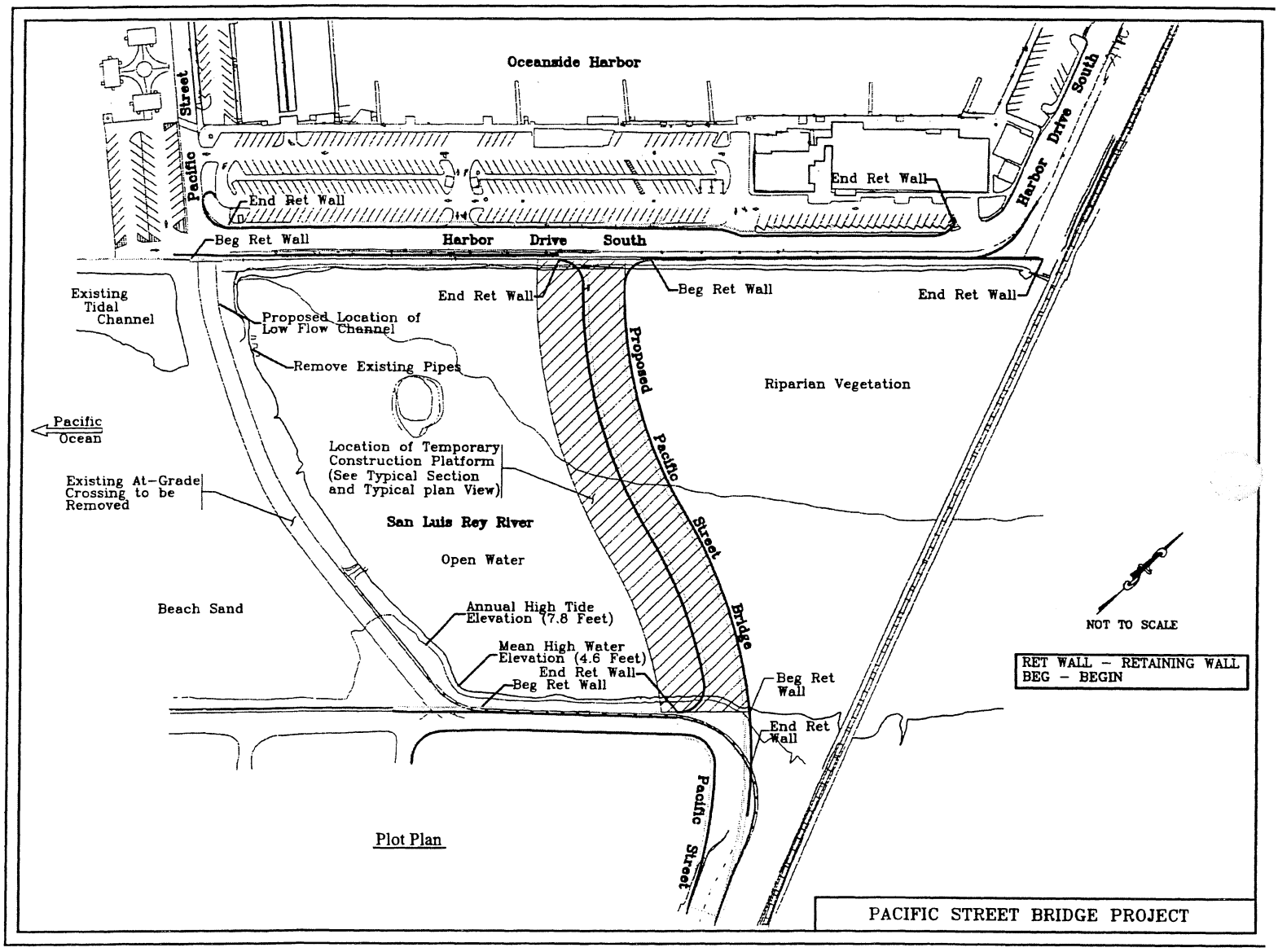

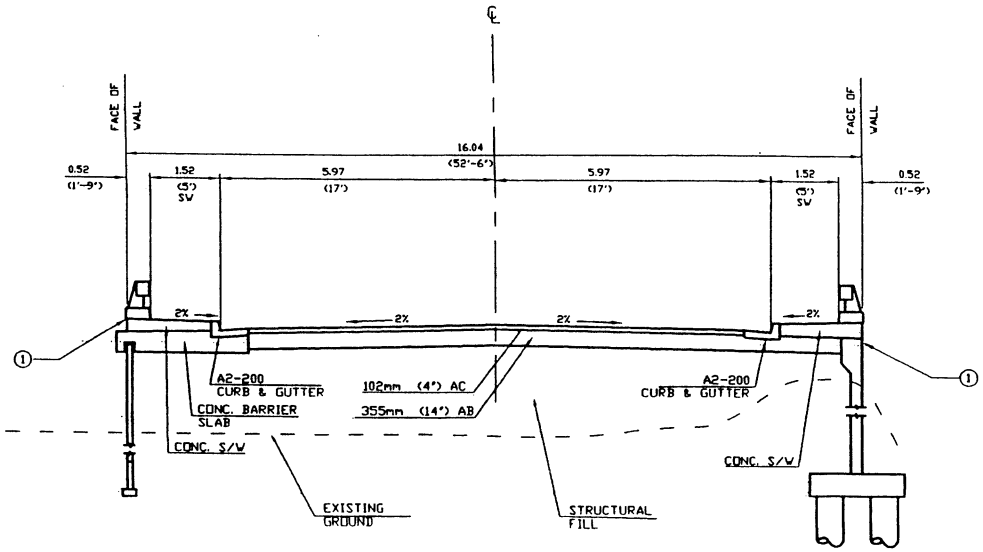


HARBOR DR SOUTH
STA 4+65 TO STA 5+60

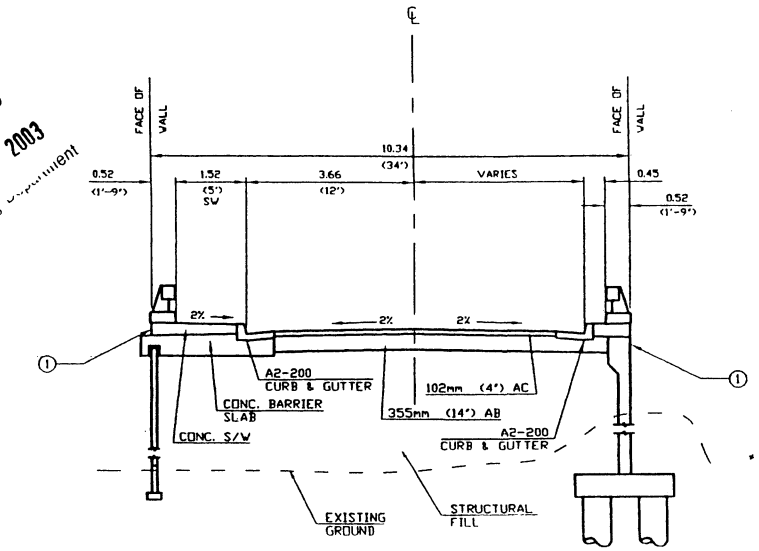


HARBOR DR SOUTH
STA 6+32 TO STA 6+70

RECEIVED
SEP 17 2003
Planning Department

PRELIMINARY
5/22/03

**NOTES:**

1. See sturctural plans for details of barrier and retaining walls.

WILLDAN
Serving Public Agencies
9275 Sky Park Court, Suite 110
San Diego, California 92123
858/467-9950 Fax 858/467-1346

| NO. | DESCRIPTION | APPV'D | DATE |
|---|---|---|---|
| | | | |
| | | | |
| | | | |
| | | | |
| 1 | [illegible] | | [illegible] |

Description:
Location:
Record From:
Elev: Datum:

SHEET 1 | CITY OF OCEANSIDE ENGINEERING DEPARTMENT | SHEETS

HARBOR DRIVE SOUTH
PACIFIC STREET CROSSING
OVER SAN LUIS REY RIVER

APPROVED
R.E.E. CITY ENGINEER

ENGINEER OF WORK
R.E.E.

Checked By: | PLAN NUMBER
Approval Date: | Scale: NTS

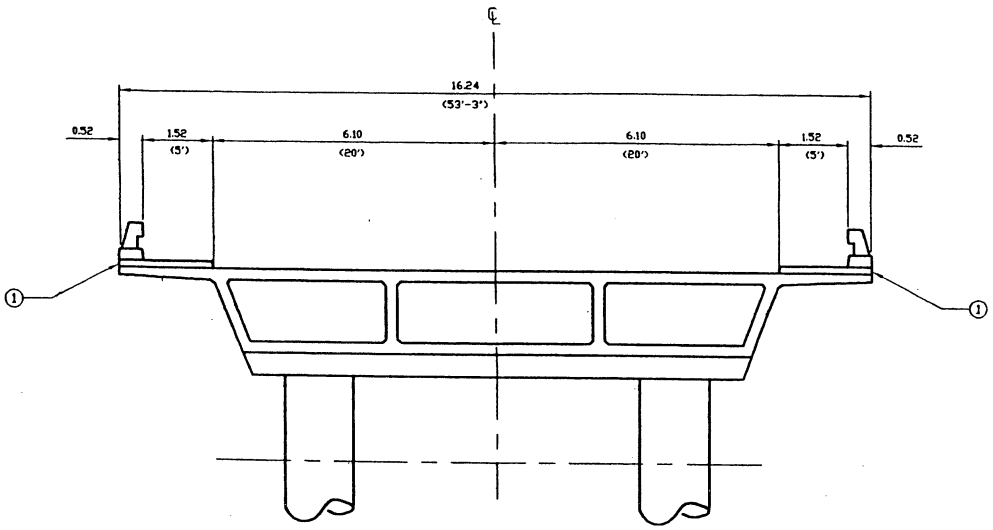


PACIFIC BRIDGE
STA 13+10 TO STA 15+00

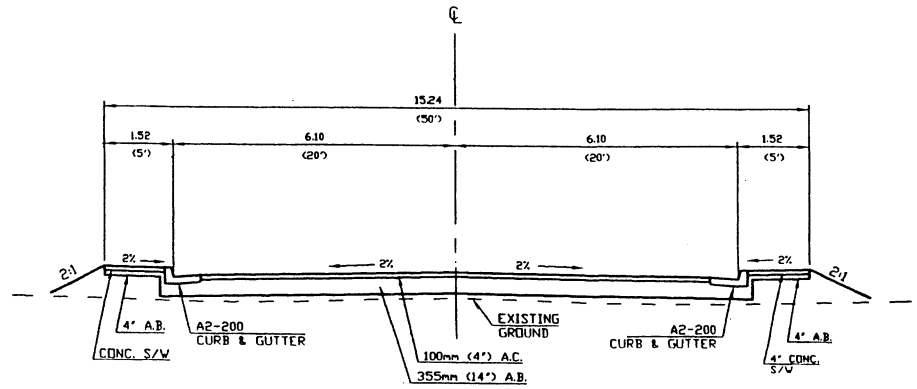


PACIFIC STREET
STA 15+40 TO 15+80

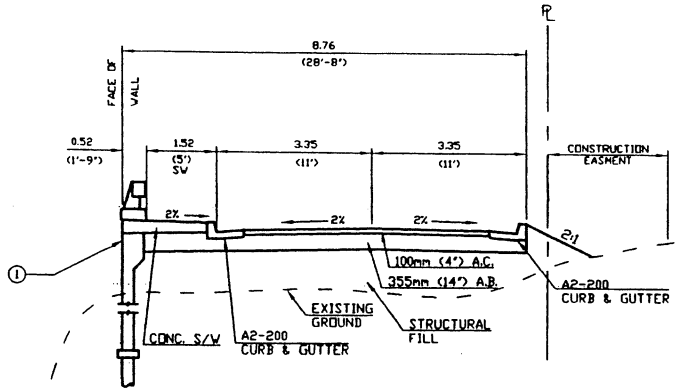


PACIFIC ACCESS ROAD
STA 25+70 TO STA 26+09

**PRELIMINARY**
5/23/03

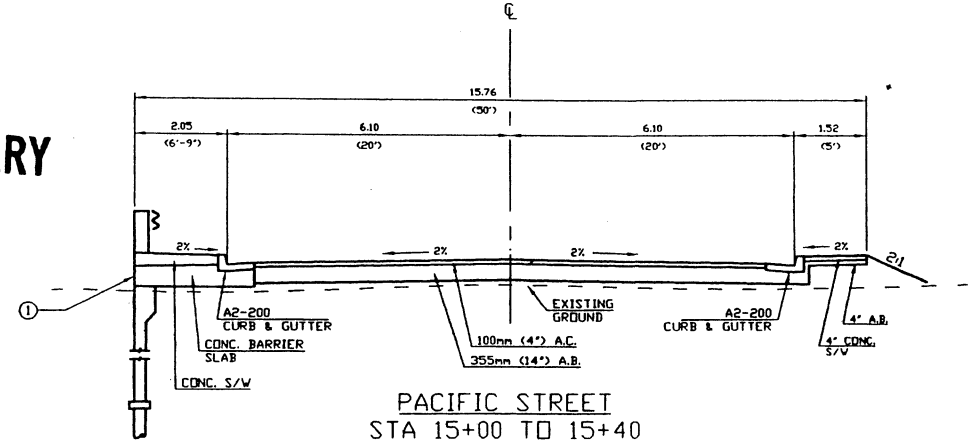


PACIFIC STREET
STA 15+00 TO 15+40

**NOTES:**

1. See sturctural plans for details of barrier and retaining walls.

WILLDAN
Serving Public Agencies
3875 Sky Park Court, Suite 110
San Diego, California 92123
858/467-6900 Fax 858/467-1346

| NO. | DESCRIPTION | APPV'D | DATE |
|---|---|---|---|
| - | | | |
| | | | |
| | | | |
| | | | |
| | | | |
| 1 | 30% PSAE | | 5/23/03 |

Description:
Location:
Record From:
Elev: Datum:

SHEET 2 | CITY OF OCEANSIDE ENGINEERING DEPARTMENT | SHEETS

**PACIFIC STREET**
**PACIFIC STREET CROSSING**
**OVER SAN LUIS REY RIVER**

APPROVED
R.C.E. CITY ENGINEER

ENGINEER OF WORK
R.C.E.

Checked By: | PLAN NUMBER
Approved Date: | Scale: NTS

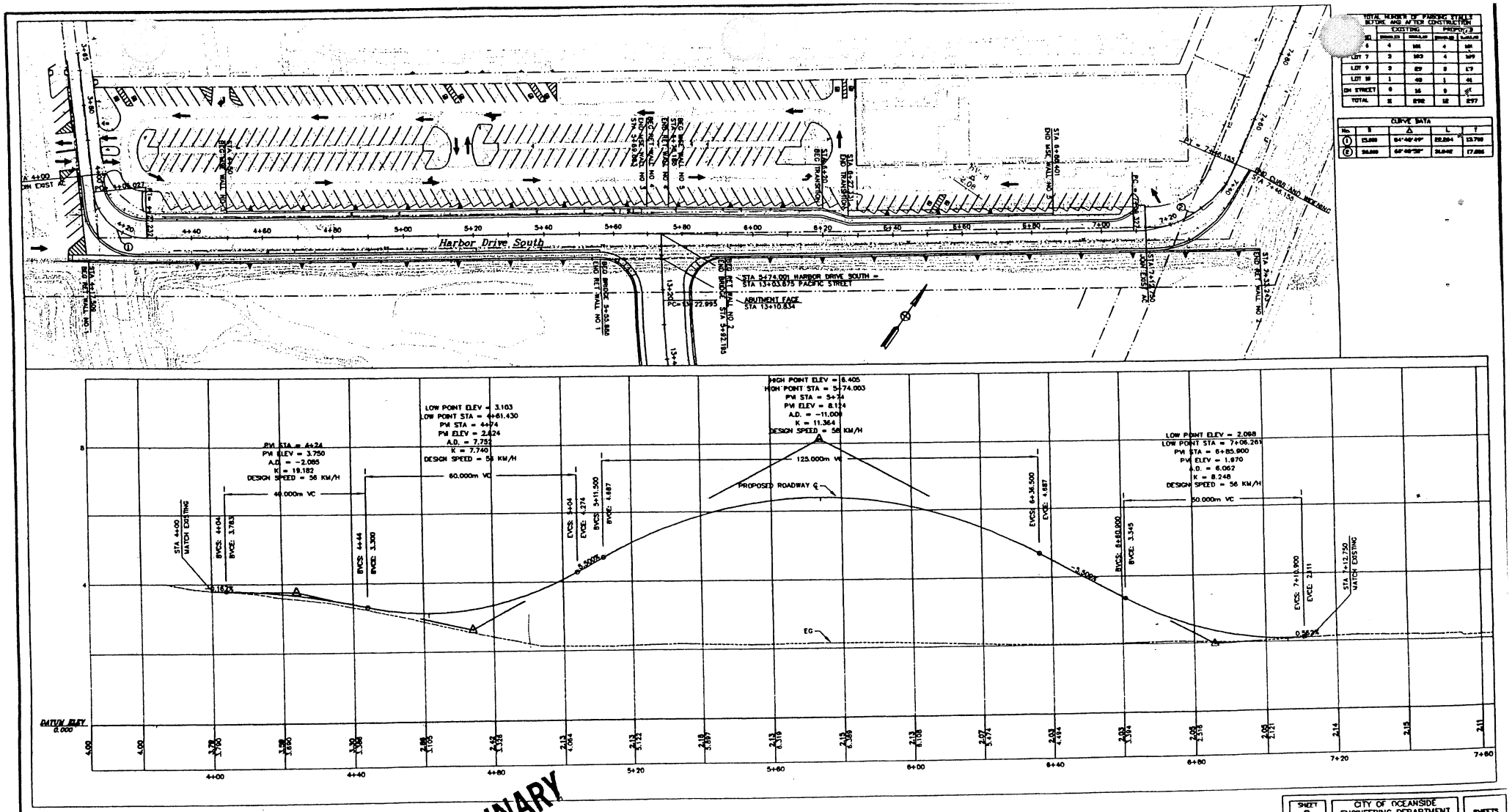


| TOTAL NUMBER OF PARKING STALLS BEFORE AND AFTER CONSTRUCTION | | | | |
|---|---|---|---|---|
| | EXISTING | | PROPOSED | |
| LOT | [illegible] | [illegible] | [illegible] | [illegible] |
| 6 | 4 | 101 | 4 | 101 |
| LOT 7 | 3 | 103 | 4 | 109 |
| LOT 9 | 3 | 69 | 3 | 67 |
| LOT 10 | 1 | 40 | 1 | 41 |
| ON STREET | 0 | 16 | 0 | 17 |
| TOTAL | 12 | 278 | 12 | 277 |

| CURVE DATA | | | | |
|---|---|---|---|---|
| No. | R | Δ | L | T |
| 1 | 15.000 | 84°46'49" | 22.204 | 13.700 |
| 2 | 30.000 | 67°49'39" | 35.502 | 17.886 |

PRELIMINARY 5/23/03

SCALE 1:500 HORIZ
SCALE 1:50 VERT

WILLDAN
Serving Public Agencies
9275 Sky Park Court, Suite 110
San Diego, California 92123
858/467-6950 fax 858/467-1346

| NO. | DESCRIPTION | APPV'D | DATE |
|---|---|---|---|
| 1 | 30% PS&E | | 5/23/03 |

Description:
Location:
Record From:
Elev: Datum:

SHEET 3 | CITY OF OCEANSIDE ENGINEERING DEPARTMENT | SHEETS

# HARBOR DRIVE SOUTH PACIFIC STREET CROSSING OVER SAN LUIS REY RIVER

APPROVED
R.C.E. CITY ENGINEER

ENGINEER OF WORK
R.C.E.

Checked By:
Approved Date:
PLAN NUMBER
Scale: 1:500

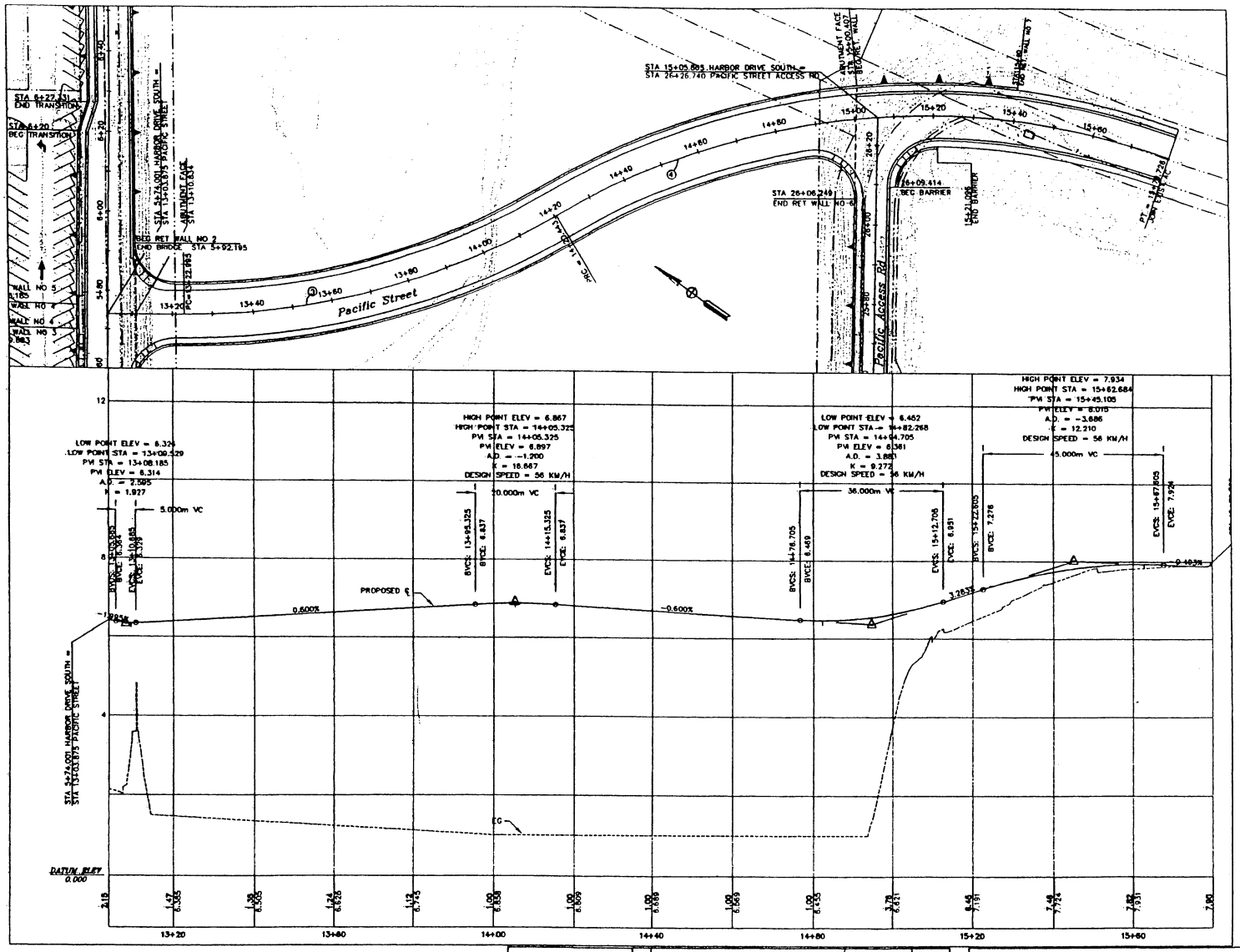


| CURVE DATA | | | | |
|---|---|---|---|---|
| No. | R | Δ | L | T |
| 3 | 182.880 | 30°31'49" | 97.448 | 49.911 |
| 4 | 182.880 | 49°54'10" | 159.283 | 85.090 |

PRELIMINARY
5/23/03

SCALE 1:500 HORIZ
SCALE 1:50 VERT

WILLDAN
Serving Public Agencies
9275 Sky Park Court, Suite 110
San Diego, California 92123
858/467-6950 fax 858/467-1346

| NO. | DESCRIPTION | APPV'D | DATE |
|---|---|---|---|
| 1 | 30% PS&E | | 5/23/03 |

Description:
Location:
Record From:
Elev: Datum:

SHEET 4 | CITY OF OCEANSIDE ENGINEERING DEPARTMENT | SHEETS

PACIFIC STREET
PACIFIC STREET CROSSING
OVER SAN LUIS REY RIVER

APPROVED
R.C.E. CITY ENGINEER

ENGINEER OF WORK
R.C.E.
Checked By
Approval Date:
PLAN NUMBER
Scale: 1:500

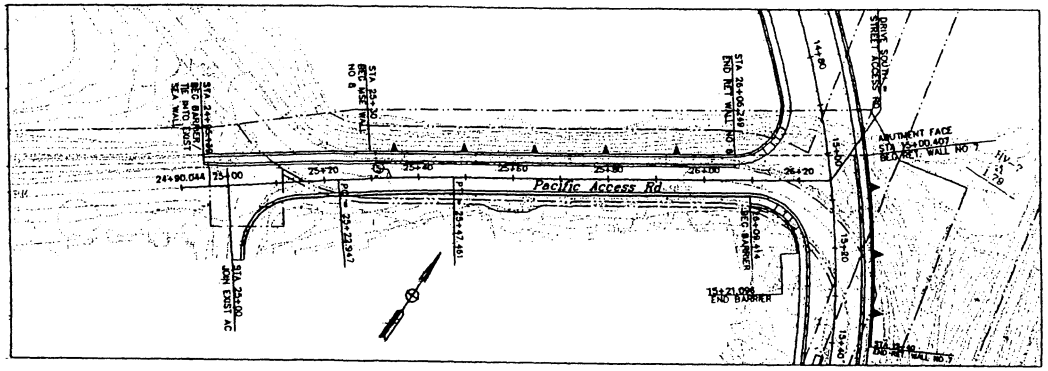


| CURVE DATA | | | | |
|---|---|---|---|---|
| No. | R | Δ | L | T |
| 5 | 400.000 | 03°30'41" | 24.514 | 12.261 |

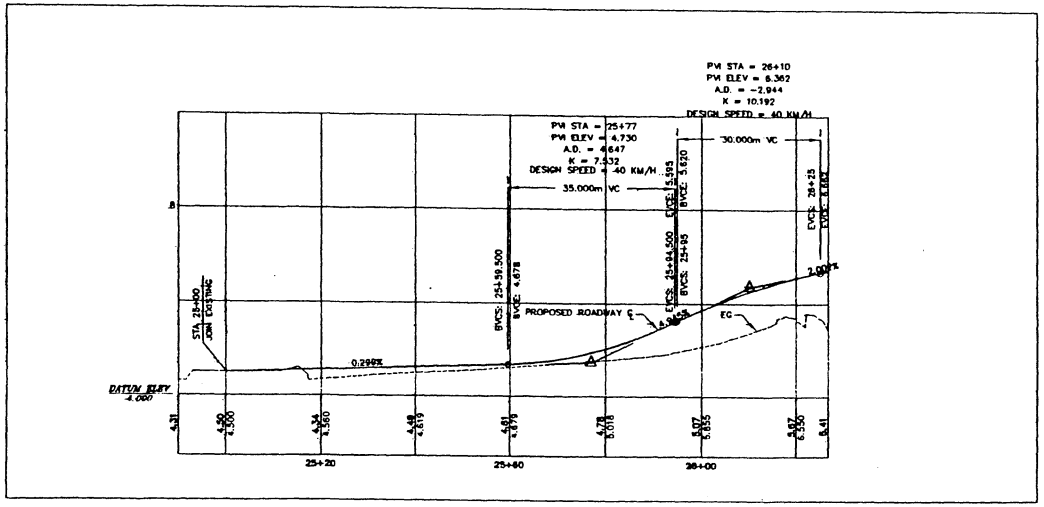


PRELIMINARY
9/23/03

| NO. | DESCRIPTION | APPV'D | DATE |
|---|---|---|---|
| 1 | 30% PS&E | | 9/23/03 |

Description:
Location:
Record From:
Elev: Datum:

SHEET 5 | CITY OF OCEANSIDE ENGINEERING DEPARTMENT | SHEETS

PACIFIC STREET ACCESS RD
PACIFIC STREET CROSSING
OVER SAN LUIS REY RIVER

APPROVED
R.C.E. CITY ENGINEER

ENGINEER OF WORK R.C.E. | Checked By: | PLAN NUMBER | Approval Date: | Scale: 1:500

SCALE 1:500 HORIZ
SCALE 1:50 VERT

WILLDAN
Serving Public Agencies
9275 Sky Park Court, Suite 110
San Diego, California 92123
858/467-6950 Fax 858/467-1346