AGENDA NO. 9

PLANNING COMMISSION **STAFF REPORT**

DATE: July 22, 2013

TO: Chairperson and Members of the Planning Commission

FROM: Development Services Department/Planning Division

SUBJECT: **CONSIDERATION OF CONDITIONAL USE PERMIT (CUP12-00036) AND CONDITIONAL USE PERMIT (CUP13-00023) FOR UPGRADES TO AND THE CONTINUED OPERATION OF A STAND-ALONE WIRELESS COMMUNICATIONS FACILITY AT 4039 AVENIDA DE LA PLATA – T-MOBILE AT 4039 AVENIDA DE LA PLATA – APPLICANT: T-MOBILE WEST CORPORATION**

RECOMMENDATION

Staff recommends that the Planning Commission by motion:

(1) Confirm issuance of a Class One (1), Categorical Exemption "Existing Facilities" and,

(2) Adopt Planning Commission Resolution No. 2013-P37 approving Conditional Use Permits CUP12-00036 and CUP13-00023 with findings and conditions of approval attached herein.

PROJECT DESCRIPTION AND BACKGROUND

Site Review: The project site is at 4039 Avenida de la Plata, a light industrial use property currently occupied by a biopharmaceutical research company. The existing antennas are attached to a monopole disguised as a pine tree. The property has a land use designation of Rancho Del Oro Specific Plan (S-1-84) on the General Plan Land Use Map and is zoned Planned Development-1 (PD-1) on the official zoning map.

Surrounding land uses include industrial properties to the north, east, south and west.

Background: The subject communications facility was initially approved on July 26, 2004 pursuant to Planning Commission Resolution 2004-P37. The original Conditional Use Permit (CUP-22-03) granted Cingular Wireless entitlements for up to 12 antennas, concealed within a 78-foot faux pine tree (monopine). Only 6 antennas were ever installed.

Entitlements granted by CUP-22-03 expired on July 26, 2009. The current application for T-Mobile West Corporation was submitted on December 5, 2012.

Three other wireless communications facilities are on the subject property. The first facility, a 75-foot monopine (C-19-99), was initially approved under Resolution 2000-P03 and expired in 2005. This facility is currently operated by Sprint/Nextel and was issued a new permit (CUP10-00010) pursuant to Resolution 2012-P25. The permit will expire in January 2017.

The second facility, also a 75-foot monopine (C-51-00), was initially approved pursuant to Resolution 2001-P33 and its permit expired in 2006. This facility is currently operated by Sprint/Nextel and an application (CUP12-00039) is under review to allow for upgrades to and the continued operation of the facility.

The third facility is an 80-foot monopine (C-3-06, C-39-06) and was initially approved under Resolution 2007-P26. This facility is currently operated by Verizon Wireless and the permit will expire in May 2017.

Project Description: The project application is comprised of the following required entitlements:

Conditional Use Permit CUP12-00036 represents a request for the following:

(a) The continued operation of a stand-alone wireless communications facility, with upgrades necessary to accommodate fourth generation (4G) wireless technologies. Specific facility upgrades consist of the removal of six (6) existing antennas and the installation of six (6) out of twelve (12) new antennas on a monopole disguised as a pine tree. (See Attachment 1)

Conditional Use Permit CUP13-00023 represents a request for the following:

(b) To exceed the zoning district height limit of 55 feet, pursuant to Article 106 of the Rancho Del Oro Industrial Master Development Plan and Section 3913 A. 1. of the Zoning Ordinance.

Article 39 of the City's Zoning Ordinance (Wireless Communications Facility, Satellite Dish and Antenna Standards) allows the establishment and operation of single provider communications facilities subject to approval of a Conditional Use Permit and contingent upon standards, findings, and conditions articulated in Article 39 and Article 41 (Use Permits and Variances) of the City's Zoning Ordinance. A separate Conditional Use Permit may be granted to exceed the height limitations of an underlying zoning district, pursuant to Article 39 and 41 of the Zoning Ordinance and Article 106 of the Rancho Del Oro Industrial Master Development Plan.

The project is subject to the following Ordinances, City policies, and the State of California Government Code:

1. General Plan
2. Zoning Ordinance
3. State of California Government Code 65850
4. California Environmental Quality Act (CEQA)

ANALYSIS

1. General Plan conformance

The General Plan Land Use Map designation for the subject property is Rancho Del Oro Specific Plan (S-1-84). The proposed project is consistent with this designation and the goals and objectives of the City's General Plan as follows:

Land Use Element

Goal 2.726: Communication Systems

Objective: To provide for the efficient and aesthetic functioning of communication systems within the City.

Policies:

A. The City shall encourage planning for the future communication system needs of individual land developments or uses and the City in general.

B. Communication facilities shall be required to conform visually to surrounding land uses and/or natural features.

C. The City shall require the consolidation and joint-use of communication facilities and structures whenever possible.

T-Mobile seeks to make upgrades to and continue operating a stand-alone wireless communications facility in order to provide the residents of Oceanside the latest in wireless technology by improving call quality, data transmission and speed. Signal coverage maps are attached to this staff report (Attachment 2).

The project site is located in a developed industrial area on an existing monopine. Industrial properties have proven to be ideal locations for wireless communications facilities because the antenna use can easily be integrated into the operation of the property without impacting on-site or surrounding land uses.

The proposed antenna upgrades would be concealed from public view within a 78-foot faux pine tree and would be well integrated among existing pine trees and the three other monopines. The project is conditioned to comply with specific requirements pertaining to its appearance and maintenance to ensure that the project maintains its high aesthetic value and land use compatibility.

2. Zoning Ordinance Compliance

The project is subject to Article 39 of the City's Zoning Ordinance, which lists operation and maintenance standards, as well as locational, site development, and safety and monitoring standards for wireless communication facilities.

The proposed facility would be unmanned, requiring approximately one (1) maintenance visit per month. Standard conditions of approval will ensure that the proposed facility remains in good repair and free of debris, litter, and graffiti, and that any damage or blight shall be corrected.

Applicable design standards require that wireless communications facilities employ camouflage design techniques in order to minimize visual impacts. The proposed project would be camouflaged within a monopole designed to replicate a pine tree which has been designed to match in color, size, proportion, texture, and quality the character of the surrounding natural environment.

Locational standards establish an order of preference for properties on which wireless communications facilities are proposed. The most preferred locations for such facilities are City-owned sites and the least preferred locations are those within residential districts. The proposed project would be located within an industrial district, which is the second most desirable location out of seven. The antennas would be concealed within the monopine, which would mitigate any potentially adverse visual impacts to the surrounding environment.

Siting standards encourage collocation where technologically feasible and where collocation would be visually superior to the otherwise necessary stand-alone facility. Although collocation at this site would be technologically feasible, the applicant has submitted evidence to show how coverage from this facility would be negatively impacted by the requirement to collocate. In addition, relocating this facility would require the removal of the existing monopine. The original approval of the faux tree was partially based on a comprehensive multi-monopine design for the property.

Wireless communications facilities may exceed the maximum building height of the underlying zoning district by 10 feet. A Conditional Use Permit may be granted to exceed the height limitation. In the PD-1 industrial zone, the maximum allowed building height is 45 feet. As the subject facility is 78 feet in height, a second Conditional Use Permit has been requested in order to allow the originally permitted height of the faux tree to be retained.

Wireless communications facilities are required to comply with the most current regulatory and operational standards including RF radiation exposure standards adopted by the Federal Communications Commission (FCC). As proposed, the project would be in compliance with FCC standards.

3. State of California Government Code 65850

California State Government Code 65850.6(b) states that a city shall not unreasonably limit the duration of any permit for a communication facility. Limits of less than 10 years are presumed to be unreasonable absent public safety reasons or substantial land use reasons. The recommended 10-year conditional approval will ensure that technological enhancements, or other analyses of the site, would be accommodated. The original permit for this facility expired on July 26, 2009. The 10-year limit for the subject Conditional Use Permits shall be retroactive and shall expire on July 26, 2019.

DISCUSSION

Issue: Remaining as a stand-alone facility versus collocating

At the time of Conditional Use Permit issuance for the subject facility, two other monopines existed onsite (C-19-99 and C-51-00). These monopines were built as single carrier trees and the applicant was not able to collocate on them. Therefore, the addition of a third monopine (C22-03) was determined to be the most compatible solution for another wireless communications facility at this property.

The subject facility was built to allow for additional wireless providers, thereby creating the opportunity for collocation in the future. However, Zoning Ordinance regulations at that time did not have an explicit requirement for providers to collocate and subsequently, a fourth stand-alone facility (C-3-06, C-39-06) was erected on the property. This facility was also designed and built to allow for multiple providers and is currently occupied by Verizon Wireless.

Under the newly adopted Article 39, collocation of wireless communications facilities shall be required whenever feasible. The applicant was required to explore the potential for relocating their antennas to the Verizon monopine as part of the application review process. Coverage maps were provided by the applicant demonstrating the need to maintain the subject facility on the service grid as it currently exists. It was demonstrated that requiring collocation of this site would negatively impact the applicant's ability to provide services to its customers.

If T-Mobile were to collocate on the Verizon monopine, their antennas would be lowered to 55 feet. Signal coverage maps showed a substantial drop in service to the north and south of the facility when the antennas are reduced in height by 15 feet. Most evident is the loss in coverage along Oceanside Boulevard. This is a major east-west thoroughfare through the City and loss of coverage along this road would negatively impact both citizens and visitors traveling through Oceanside.

The existing facility has not generated community concern and allowing it to remain in its current location is the least intrusive means of providing continued coverage for this provider in this area. Relocating this facility would require the removal of the existing

monopine, which was initially approved based on a comprehensive, multi-monopine design for the multi-carrier property. The removal of one of the monopines would undermine the camouflage effectiveness of the onsite wireless facilities as a whole.

Issue: *Exceeding the height limit*

The faux pine tree will be a maximum of 78 feet in height, but the maximum height of the monopole (trunk) will be limited to 73 feet, 6 inches. As designed and conditioned, the antennas will be mounted at a height of 70 feet, with the top of the antennas at a height of 72 feet, 4 inches. A deviation from height limitations will allow for a more effective use of the disguise and will reduce any visual impacts from the proposed panel antennas. The proposed facility is located on the same property as three other monopine communication facilities, which are between 70 and 80 feet tall. There are also approximately 40 pine trees existing onsite of varying heights. Allowing the subject facility to remain with a height of 78 feet would be consistent with the existing environment.

Issue: *Compliance with Federal Communications Commission (FCC) rules and regulations*

FCC guidelines establish separate maximum permissible exposure (MPE) limits for "general population/uncontrolled exposure" and for "occupational/controlled exposure." The general population/uncontrolled limits set the maximum exposure to which most people may be subjected. People in this group include the general public not associated with the installation and maintenance of the transmitting equipment. Higher exposure limits are permitted under the "occupational/controlled exposure" category, but only for persons who are exposed as a consequence of their employment (e.g., wireless radio engineers, technicians). The MPE limits adopted by the FCC for occupational/controlled and general population/uncontrolled exposure incorporate a substantial margin of safety and have been established to be well below levels generally accepted as having the potential to cause adverse health effects.

The compliance documentation submitted by T-Mobile indicates that based on worst-case predictive modeling, including cumulative impacts from the other communications facilities on-site, there are no areas at ground level that exceed MPE limits. At ground-level, the maximum power density generated by the antennas is 4.0 percent of the FCC's general population limit. The antennas will be mounted 74 feet in the air and the general public will not have access to them. It is presumed that T-Mobile employees and facility owners are aware of the transmitting antennas and will take appropriate precautions when working near them. It has been recommended, and conditioned, that RF advisory signs be installed as a courtesy to establish awareness for potential exposure at access points or paths to the antennas.

ENVIRONMENTAL DETERMINATION

Planning Division staff has completed a preliminary review of this project in accordance with the California Environmental Quality Act (CEQA). Based on that review, staff finds

that the proposed project constitutes operations within existing facilities that will not involve expansion beyond what exist onsite at this time, and the project is categorically exempt, Class 1, "Existing Facilities" (Section 15301) (Attachment 3).

PUBLIC NOTIFICATION

Legal notice was published in the newspaper and notices were sent to property owners of record within a 300-foot radius of the subject property, individuals and/or organizations requesting notification, the applicant and other interested parties.

SUMMARY

The subject Conditional Use Permit will allow for upgrades to and the continued operation of a stand-alone wireless communications facility, consistent with the requirements of the Zoning Ordinance and the land use policies of the General Plan. The project meets all applicable development standards and will not impact existing land uses in the immediate area. As such, staff recommends that the Planning Commission approve the project based on the findings and subject to the conditions contained in the attached resolution. Staff recommends that the Planning Commission:

-- Confirm issuance of a CEQA Class One (1), Categorical Exemption "Existing Facilities" and,

-- Adopt Planning Commission Resolution No. 2013-P37 approving Conditional Use Permits CUP12-00036 and CUP13-00023 with findings and conditions of approval attached herein (Attachment 4).

PREPARED BY:

Sally Schifman
Project Planner

SUBMITTED BY:

Marisa Lundstedt
City Planner

ML/SS/fil

Attachments:

1. Plans dated May 9, 2013
2. Signal Coverage Maps
3. Environmental Determination
4. Planning Commission Resolution No. 2013-P37
5. Other Attachments (Application Page, Description and Justification, Legal Description)

T-Mobile

SD06204A TREESCAPES INTERNATIONAL
4039 AVENIDA DE LA PLATA, OCEANSIDE, CA 92056

LEGAL DESCRIPTION

LEGAL DESCRIPTION:

ALL THAT CERTAIN REAL PROPERTY SITUATED IN THE COUNTY OF SAN DIEGO, STATE OF CALIFORNIA DESCRIBED AS FOLLOWS:

PARCEL Q OF PARCEL MAP NO. 12314, IN THE CITY OF OCEANSIDE, COUNTY OF SAN DIEGO, STATE OF CALIFORNIA FILED SEPTEMBER 15, 1982 IN THE OFFICE OF THE COUNTY RECORDER OF SAN DIEGO COUNTY.

DIRECTIONS TO SITE

DIRECTIONS TO SITE

FROM SAN DIEGO T-MOBILE OFFICE:

1. HEAD SOUTHEAST ON VISTA SORRENTO PKWY TOWARD DIRECTORS PL.
2. TURN RIGHT TO MERGE ONTO I-805 N
3. MERGE ONTO I-5 N.
4. TAKE EXIT 51B TO MERGE ONTO CA-78E TOWARD ESCONDIDO.
5. TAKE EXIT 3 FOR COLLEGE BLVD
6. TURN LEFT ONTO COLLEGE BLVD
7. TURN LEFT ONTO OCEANSIDE BLVD
8. TAKE THE 1ST RIGHT ONTO AVENIDA DEL ORO
9. TURN LEFT ONTO AVENIDA DE LA PLATA

ARRIVE AT 4039 AVENIDA DE LA PLATA, OCEANSIDE, CA 92056
DESTINATION WILL BE ON LEFT.

VICINITY MAP

© 2010 DeLorme (www.delorme.com) TOPO NORTH AMERICA

CLIENT APPROVALS

RF INITIALS: ______ DATE	ZONING/PLANNING INITIALS: ______ DATE
ARCHITECT INITIALS: ______ DATE	CONSTRUCTION INITIALS: ______ DATE
SITE ACQUISITION INITIALS: ______ DATE	LANDLORD INITIALS: ______ DATE

TITLE 24 COMPLIANCE

ACCESSIBILITY DISCLAIMER

THIS PROJECT IS AN UNOCCUPIED WIRELESS TELECOMMUNICATIONS FACILITY AND, ACCORDING TO WRITTEN INTERPRETATION FROM THE CALIFORNIA DEPARTMENT OF THE STATE ARCHITECT, IS EXEMPT FROM DISABLED ACCESS REQUIREMENTS.

PROJECT STATEMENT

I HEREBY CERTIFY THAT THIS PROJECT COMPLIES WITH TITLE 24, PART 6 OF THE CALIFORNIA STATE CODE.

______ SIGNED

LICENSED ARCHITECT MITCHELL J. CAMPAGNA No. C20355 REN. 3-31-13 STATE OF CALIFORNIA

APPLICABLE CODES

APPLICABLE CODES

ALL WORK SHALL COMPLY WITH ALL APPLICABLE CODES: INCLUDING BUT NOT LIMITED TO:

1. 2010 CALIFORNIA BUILDING CODE (CBC) / 2009 INTERNATIONAL BUILDING CODE (IBC)
2. 2010 CALIFORNIA RESIDENTIAL CODE (CRC) / 2009 INTERNATIONAL RESIDENTIAL CODE (IRC)
3. 2010 CALIFORNIA ELECTRICAL CODE (CEC) / 2008 NATIONAL ELECTRICAL CODE (NEC)
4. 2010 CALIFORNIA MECHANICAL CODE (CMC) / 2009 UNIFORM MECHANICAL CODE (UMC)
5. 2010 CALIFORNIA PLUMBING CODE (CPC) / 2009 UNIFORM PLUMBING CODE (UPC)
6. 2010 CALIFORNIA FIRE CODE (CFC) / 2009 (IFC)
7. 2010 CALIFORNIA GREEN BUILDINGS STANDARDS CODE
8. 2008 BUILDING ENERGY EFFICIENCY STANDARDS

PROJECT SUMMARY

SITE NAME
TREESCAPES INTERNATIONAL

SITE NUMBER
SD06204A

SITE ADDRESS
4039 AVENIDA DE LA PLATA,
OCEANSIDE, CA 92056

APPLICANT
T-MOBILE
10509 VISTA SORRENTO PARKWAY
SUITE 206
SAN DIEGO, CA 92121

TELECOMMUNICATION CARRIERS
NEXTEL, SPRINT, CRICKET, & VERIZON CURRENTLY ALSO LOCATED ON SUBJECT PROPERTY

OWNER
GILEAD SCIENCES INC.
333 LAKESIDE DR.
FOSTER CITY, CA 94404

ASSESSOR'S PARCEL NUMBER:
162-503-28

(E) OCCUPANCY:
B

(E) TYPE OF CONSTRUCTION:
V - N

CURRENT ZONING:
PD-I

GENERAL PLAN LAND USE DESIGNATION:
RANCHO DEL ORO S-I-84- INDUSTRIAL

PROJECT DESCRIPTION:
T-MOBILE WIRELESS PROPOSES TO CONTINUE OPERATING AND MAINTAIN AN UNMANNED, DIGITAL MOBILE RADIO COMMUNICATIONS FACILITY AT THIS SITE.

- ENTITLEMENTS: (12) ANTENNAS TOTAL, 1 PREFABRICATED SHELTER
- NO PROPOSED CHANGES TO EXISTING (1 TOTAL) PREFABRICATED EQUIPMENT SHELTER WITH 2 'BTS' CABINETS.
- EXISTING T-MOBILE ANTENNAS MOUNTED ON A 78 FT. HT. MONOPINE. ANTENNAS TO BE REPLACED WITH MODEL 'ERICSSON AIR21' (2 PER SECTOR), 6 ANTENNAS TOTAL OF 12 ENTITLED. UNUSED MOUNTING ARMS TO BE REMOVED.

CONSULTANT TEAM

ARCHITECTS & ENGINEERS

MITCHELL J. ARCHITECTURE
4883 RONSON COURT, SUITE N
SAN DIEGO, CA 92111
TEL: (858) 650-3130
FAX: (858) 650-3140

CONTACT : ART BROWN (PROJECT MANAGER)

APPLICANT REPRESENTATIVE

DEPRATTI INC.
13948 CALLE BUENO GANAR
JAMUL, CA 91935

CONTACT : ANNE REGAN
(858) 602-6522

APPLICANT CONTACT

T-MOBILE WEST CORP.
10509 VISTA SORRENTO PARKWAY STE 206
SAN DIEGO, CA 92121
TEL: (858) 334-6138

OPERATING FREQUENCIES:
TX (GSM) - 1930 TO 1965 MHZ
RX (GSM) - 1870 TO 1845 MHZ
TX (WCDMA) - 2150 TO 2155 MHZ
RX (WCDMA) - 1750 TO 1755 MHZ

SHEET INDEX

Sheet List Table	
Sheet Number	Sheet Title
G-001	TITLE SHEET - PROJECT INFORMATION & VICINITY MAP
A-101	SITE PLAN & NOTES
A-201	EXTERIOR ELEVATIONS
A-202	EXTERIOR ELEVATIONS
D-601	ANTENNA SPECIFICATIONS

MCMXCVII

No.	Revision / Issue	Date
A	90% ZD Review	08-23-12
B	Planning Comments	01-04-13
C	Planning Comments	03-15-13
D	Client Comments	05-09-13

TITLE SHEET - PROJECT INFORMATION & VICINITY MAP

TREESCAPES INTERNATIONAL
SD06204A
4039 AVENIDA DE LA PLATA
OCEANSIDE, CA 92056

T-Mobile
10509 VISTA SORRENTO
PARKWAY SUITE 206
SAN DIEGO, CA 92121

MITCHELL J. ARCHITECTURE, INC
4883 Ronson Court, Suite N
San Diego, CA 92111
858.650.3130 (ph) / 858.650.3140 (fax)

Mitchell J architecture

LICENSED ARCHITECT MITCHELL J. CAMPAGNA No. C20355 REN. 3-31-13 STATE OF CALIFORNIA

Date	08-22-12
Drawn By	edi, ts
Checked By	mjc
Scale	NO SCALE

Mitchell J. Architecture

G-001

CUP12-00036

THIS IS NOT A SITE SURVEY:
ALL PROPERTY BOUNDARIES, ORIENTATION OF TRUE NORTH AND STREET HALF-WIDTHS HAVE BEEN OBTAINED FROM A TAX PARCEL MAP AND ARE APPROXIMATE.

ANTENNA SCHEDULE

EXISTING ANTENNAS						PROPOSED REPLACEMENT ANTENNAS						
SECTOR	AZIMUTH	QTY	MODEL	DIMENSIONS L/W/D	HEIGHT	SECTOR	AZIMUTH	QTY	MODEL	DIMENSIONS L/W/D	HEIGHT	COLOR
A	345°	2	ANDREW TMBX-65B-R2M	60.1"x6.6"x3.9"	9.2 lbs.	A	345°	2	ERICSSON AIR21	56"x12"x7.4"	49 lbs.	PAINTED TO MATCH EXISTING FAUX TREE
B	120°	2	ANDREW TMBX-65B-R2M	60.1"x6.6"x3.9"	9.2 lbs.	B	120°	2	ERICSSON AIR21	56"x12"x7.4"	49 lbs.	PAINTED TO MATCH EXISTING FAUX TREE
C	250°	2	ANDREW TMBX-65B-R2M	60.1"x6.6"x3.9"	9.2 lbs.	C	250°	2	ERICSSON AIR21	56"x12"x7.4"	49 lbs.	PAINTED TO MATCH EXISTING FAUX TREE

4039 AVENIDA DE LA PLATA

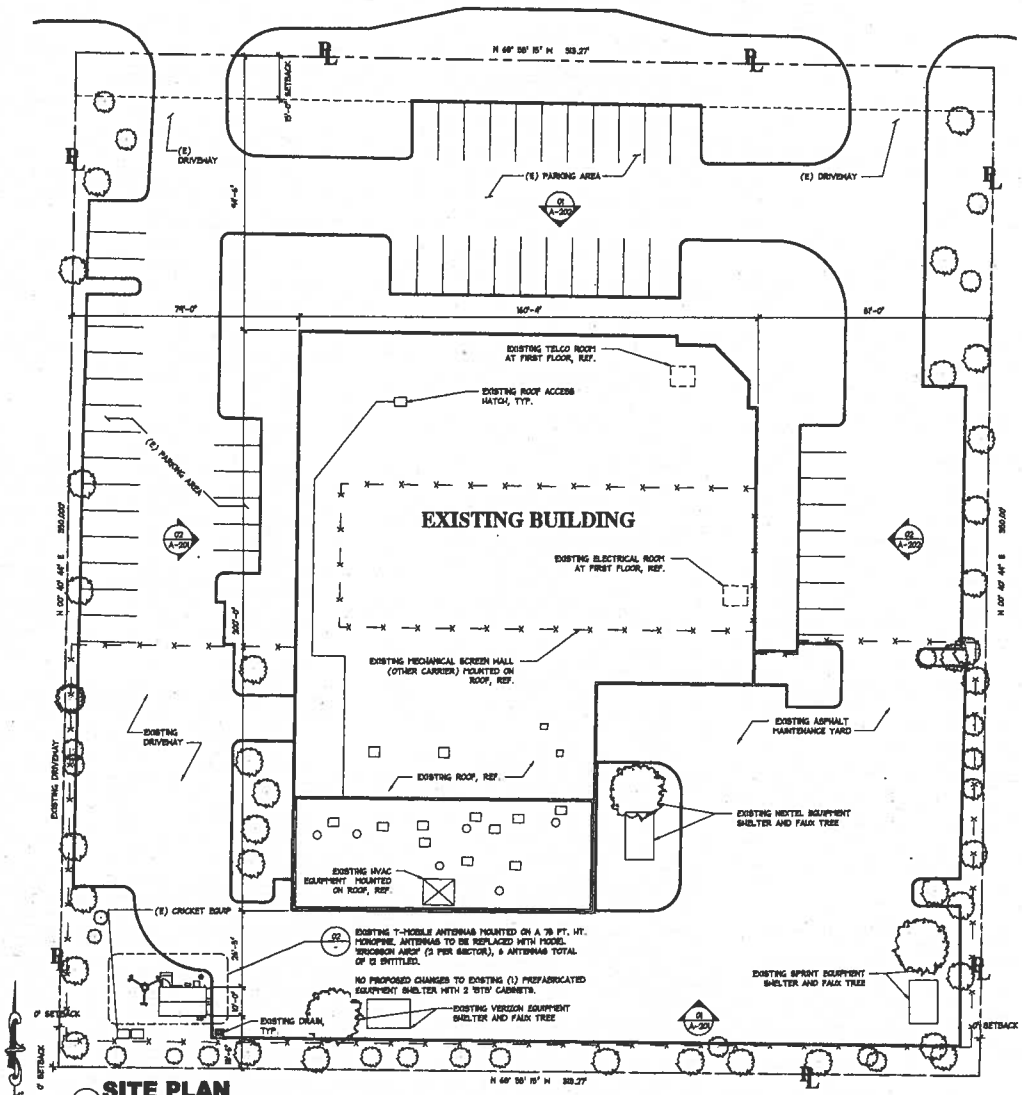

01 **SITE PLAN**
SCALE: 1"= 20'-0"

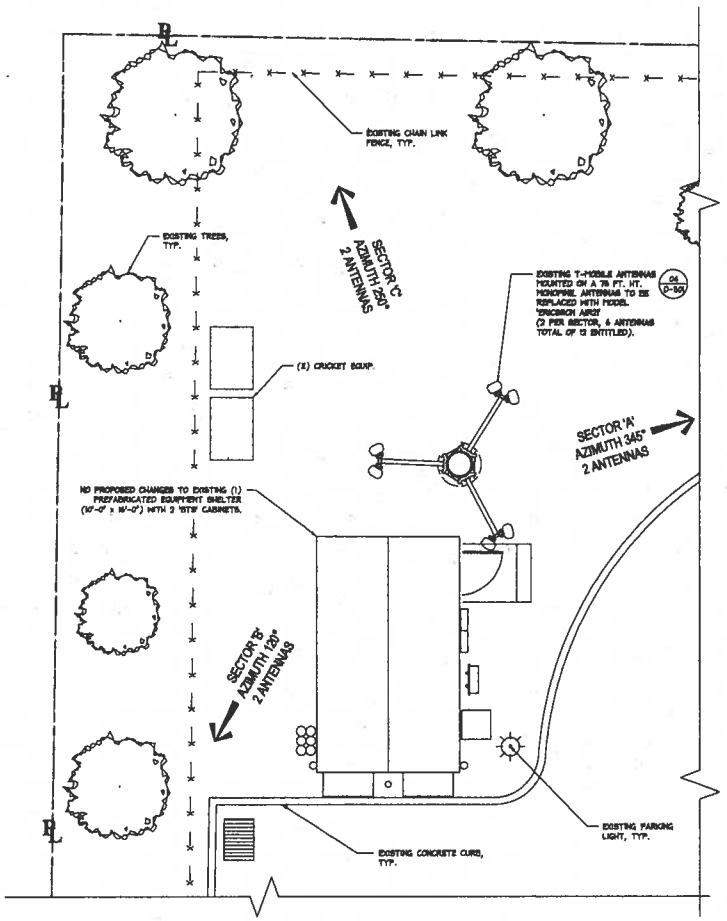

North

02 **ENLARGED SITE PLAN**
SCALE: 1/4"= 1'-0"

Underground Service Alert
Call: TOLL FREE
1-800
422-4133
TWO WORKING DAYS BEFORE YOU DIG
NOTIFY DIG-ALERT OR PRIVATE LOCATING COMPANY PRIOR TO ANY EXCAVATING OR TRENCHING

No.	Revision / Issue	Date
A	90% ZD Review	08-23-13
B	Planning Comments	01-04-13
C	Planning Comments	04-15-13
D	Client Comments	05-09-13

SITE PLAN & NOTES

architecture **Mitchell J** architecture

MITCHELL J. ARCHITECTURE, INC.
4660 Mission Bay Drive, Suite B
San Diego, CA 92109
Ph: 858.270.3310 (ph) / 858.866.3148 (fax)
Mitchell J.

T-Mobile
10509 VISTA SORRENTO PARKWAY SUITE 204
SAN DIEGO, CA 92121

TREESCAPES INTERNATIONAL
SD0S2004A
4039 AVENIDA DE LA PLATA
OCEANSIDE, CA 92056

LICENSED ARCHITECT
Mitchell J. Architecture
No. C29336
REN. 3-31-15
STATE OF CALIFORNIA

Project	
Date	08-22-12
Drawn By	cdl, ta
Checked By	mjc
Scale	AS SHOWN

©Mitchell J. Architecture

A-101

CUP12-00036

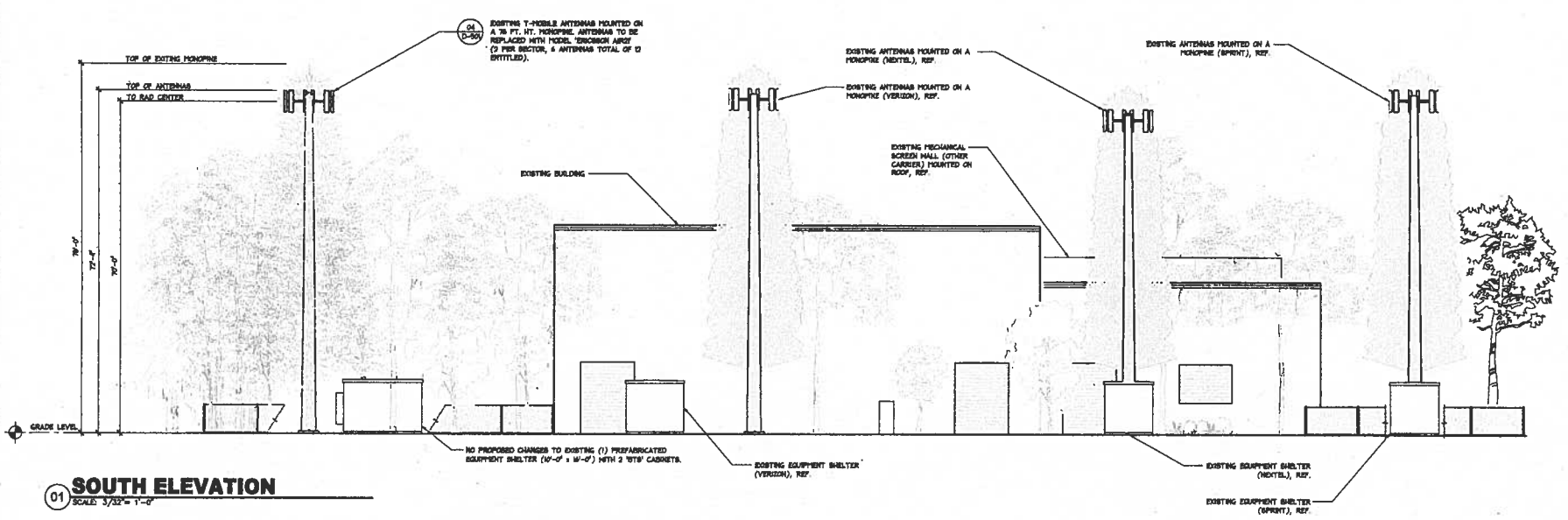

01 **SOUTH ELEVATION**
SCALE: 3/32" = 1'-0"

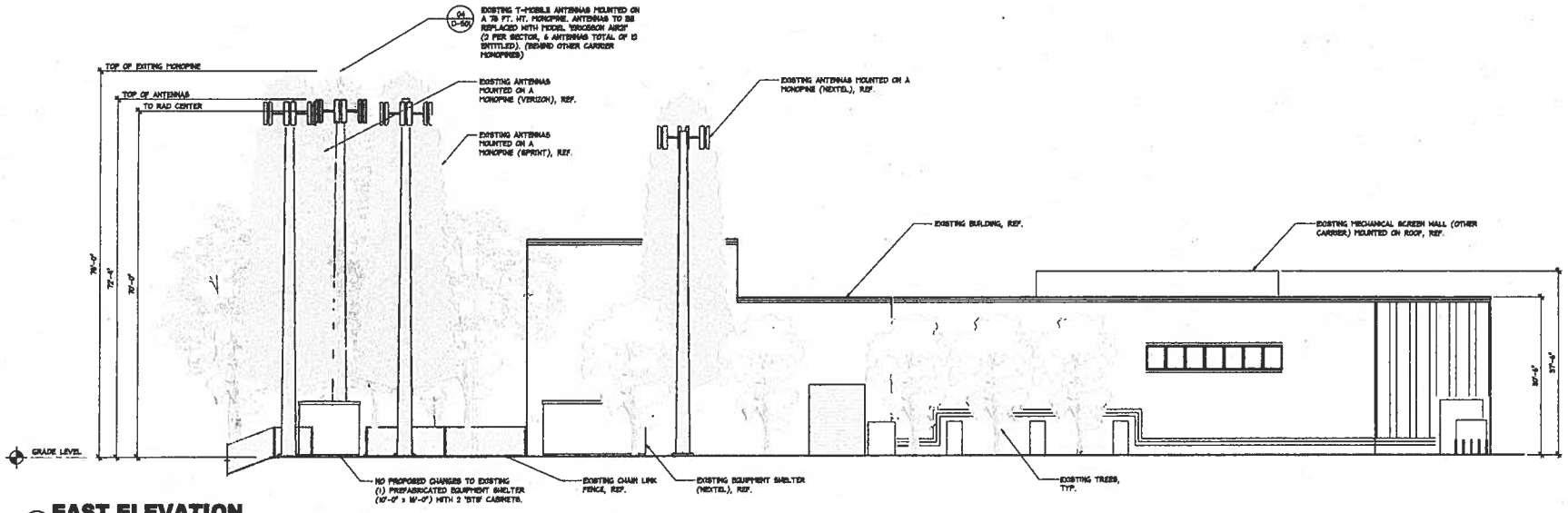

02 **EAST ELEVATION**
SCALE: 3/32" = 1'-0"

No.	Revision / Issue	Date
A	90% ZD Review	08-22-12
B	Planning Comments	01-04-13
C	Planning Comments	03-13-13
D	Client Comments	05-09-13

EXTERIOR ELEVATIONS

TREESCAPES INTERNATIONAL
SD06204A
4039 AVENIDA DE LA PLATA
OCEANSIDE, CA 92056

T-Mobile
10509 VISTA SORRENTO
PARKWAY SUITE 206
SAN DIEGO, CA 92121

architecture Mitchell J architecture

LICENSED ARCHITECT
MITCHELL J. CAMPAGNA
No. C10335
REV. 3-31-13
STATE OF CALIFORNIA

Project	
Date	08-22-12
Drawn By	edl, ta
Checked By	mjc
Scale	AS SHOWN

Mitchell J. Architecture

A-201

CUP12-00036

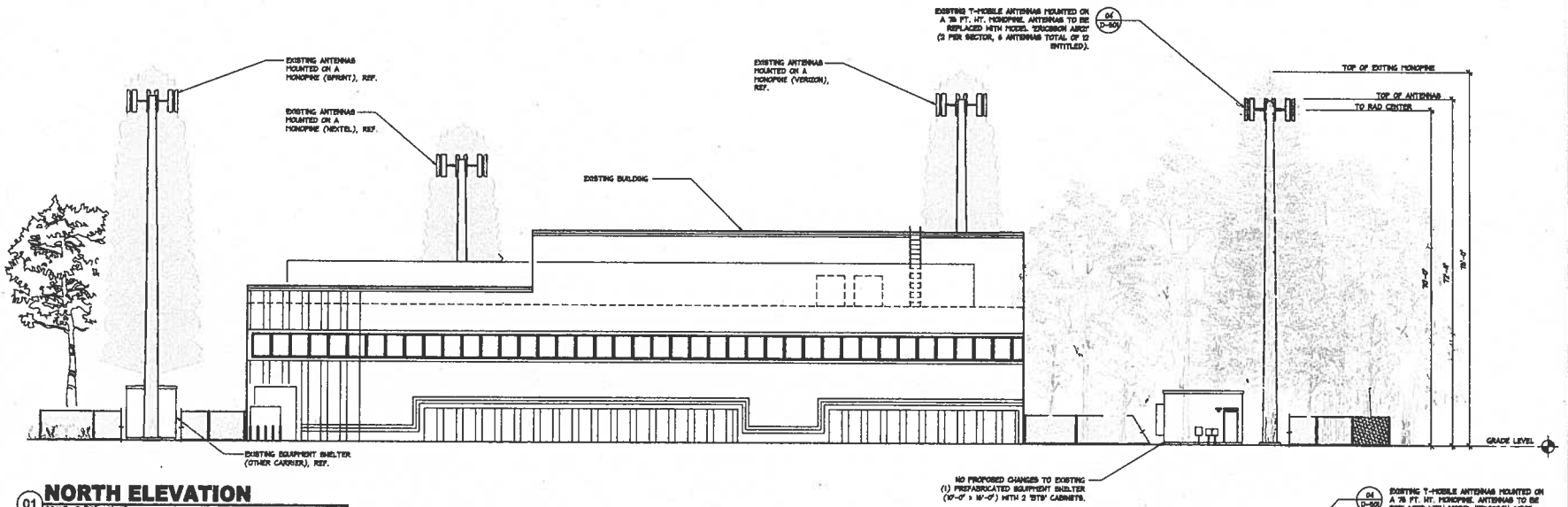

01 **NORTH ELEVATION**
SCALE: 3/32" = 1'-0"

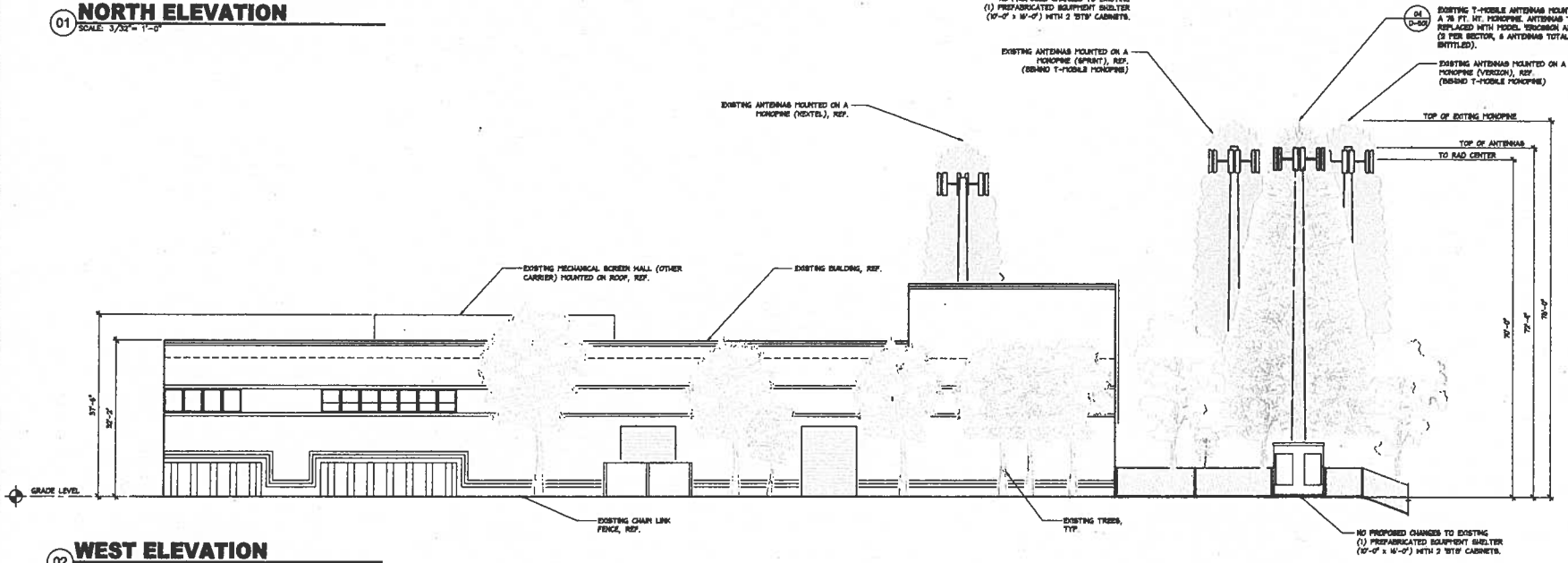

02 **WEST ELEVATION**
SCALE: 3/32" = 1'-0"

EXTERIOR ELEVATIONS

No.	Revision / Issue	Date
A	90% ZD Review	08-23-12
B	Planning Comments	01-04-13
C	Planning Comments	03-13-13
D	Client Comments	05-09-13

T-Mobile
TRESCAPES INTERNATIONAL
SD06204A
4039 AVENIDA DE LA PLATA
OCEANSIDE, CA 92056
VISTA BORREGO
PARKWAY, SUITE 300
SAN DIEGO, CA 92121

MITCHELL J. ARCHITECTURE, INC.
San Diego, CA 92111
Tel. 858.576.1140 (ph) / Fax 858.576.1141 (fax)

These drawings and specifications are the property of the architect and may not be used in whole or in part without the written permission of the architect.

architecture **Mitchell J** architecture

LICENSED ARCHITECT
MITCHELL J. CHRISTIE
No. C 30335
EXP. 2-29-13
STATE OF CALIFORNIA

Project	
Date	08-22-12
Drawn By	mcll, tn
Checked By	mj, jc
Scale	AS SHOWN

Mitchell J. Architecture

A-202

CUP12-00036

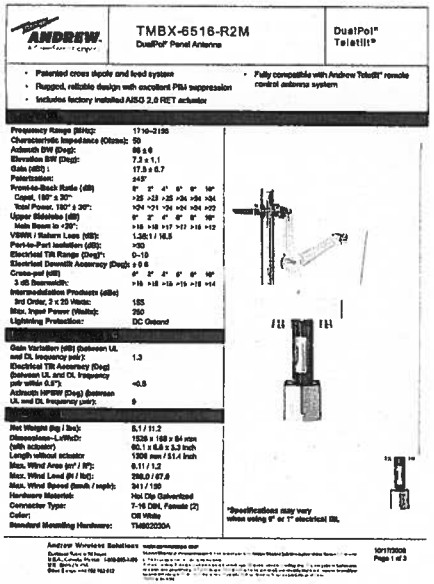

TMBX-6516-R2M
DualPol® Panel Antenna
DualPol™ Teletilt®

- Patented cross dipole and feed system
- Rugged, reliable design with excellent PIM suppression
- Includes factory installed AISG 2.0 RET actuator
- Fully compatible with Andrew Teletilt® remote control antenna system

Frequency Range (MHz):	1710–2180
Characteristic Impedance (Ohms):	50
Azimuth BW (Deg):	65 ± 6
Elevation BW (Deg):	7.3 ± 1.1
Gain (dBi):	17.3 ± 0.7
Polarization:	±45°
Front-to-Back Ratio (dB)	8° 3° 4° 5° 6° 10°
Copol, 180° ± 30°:	>25 >23 >25 >24 >24 >24
Total Power, 180° ± 30°:	>24 >21 >24 >24 >24 >22
Upper Sidelobe (dB)	8° 3° 4° 5° 6° 10°
Main Beam to +29°:	>18 >18 >17 >17 >18 >12
VSWR / Return Loss (dB):	1.35:1 / 16.5
Port-to-Port Isolation (dB):	>30
Electrical Tilt Range (Deg)*:	0–10
Electrical Downtilt Accuracy (Deg):	± 0.6
Cross-pol (dB)	8° 3° 4° 5° 6° 10°
3 dB Beamwidth:	>18 >18 >18 >19 >18 >14
Intermodulation Products (dBc)	
3rd Order, 2 x 20 Watts:	155
Max. Input Power (Watts):	250
Lightning Protection:	DC Ground
Gain Variation (dB) (between UL and DL frequency pair):	1.3
Electrical Tilt Accuracy (Deg) (between UL and DL frequency pair within 0.5°):	<0.5
Azimuth HPBW (Deg) (between UL and DL frequency pair):	0
Net Weight (kg / lbs):	8.1 / 11.2
Dimensions–LxWxD:	1535 x 168 x 54 mm
(with radome)	60.1 x 6.6 x 3.3 inch
Length without radome:	1306 mm / 51.4 inch
Max. Wind Area (m² / ft²):	0.11 / 1.2
Max. Wind Load (N / lbf):	256.0 / 57.6
Max. Wind Speed (km/h / mph):	241 / 150
Hardware Material:	Hot Dip Galvanized
Connector Type:	7-16 DIN, Female (2)
Color:	Off White
Standard Mounting Hardware:	TM802030A

*Specifications may vary when using 9° or 1° electrical tilt.

Andrew Wireless Solutions

M01772009
Page 1 of 2

Information current at date of issue but may be subject to change without notice.

01 EXISTING ANTENNA SPECIFICATIONS
SCALE: N.T.S.

AIR 21 - Key Data

- Radio:
  - Frequency bands: 1900 MHz (B2) and 1700/2100 MHz (B4)
  - One active antenna/radio, supporting e.g. 2x2 MIMO, 2 Tx + 4 Rx
  - 8 Carriers (4 carriers per radio)
  - IBW = 20 MHz per radio
- Antenna
  - One best in class 65° passive antenna : 17.2 to 17.8 dBi gain
  - Two integrated RETs, one per frequency band, -2° - 12° tilt
  - Vertical beam width : 6.5° - 7.1°
  - Dual column for UL beam-forming / 4-way RX Diversity
- Interfaces
  - Two optical fiber ports (CPRI) for active antenna/radio
  - One power connector, -48 V DC
  - Two 7/16 female connectors for passive antenna, with RET support
  - Two N female connectors for LMU (RX sharing ports) on 1900 MHz variant
- Physical Characteristics and Environment:
  - H x W x D = 1422 x 307 x 200 mm (56" x 12" x 7.9")
  - 41.5 kg (91 lbs). Two mounting brackets - add'l 2.1 kg (5 lbs).
  - <750 N Wind load (worst direction, static @ 150 km/h)
  - Operating temperature range: -40°C to +55°C (-40°F to +131°F)
  - Heat dissipation 300 W

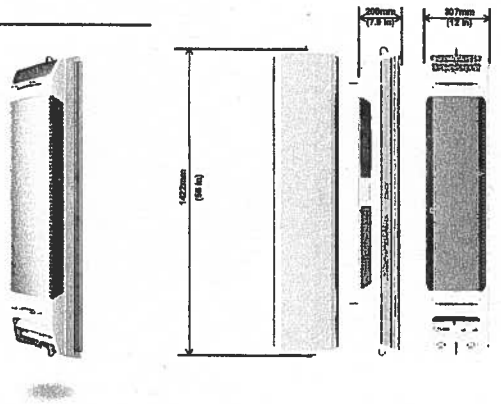

02 PROPOSED REPLACEMENT ANTENNA SPECIFICATIONS
SCALE: N.T.S.

NOTE:
ALL EXPOSED CABLES BRACKETS AND SUPPORTS SHALL BE PAINTED TO MATCH FAUX MONOPINE NEEDLES & BRANCHES

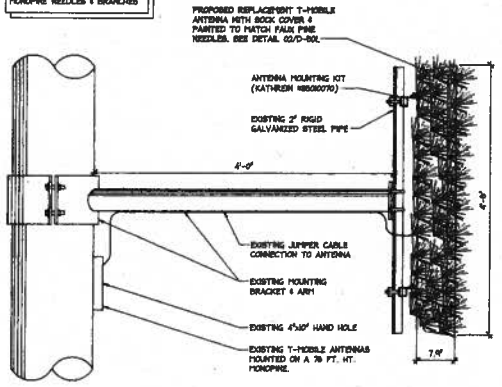

03 ANTENNA DETAILS
SCALE: N.T.S.

KEYED NOTES

1. EXISTING T-MOBILE ANTENNAS MOUNTED ON A 70 FT. HT. MONOPINE. ANTENNAS TO BE REPLACED WITH MODEL ERICSSON AIR21 (2 PER SECTOR, 6 ANTENNAS TOTAL OF 12 ENTITLED). SEE DETAIL 02/D-501
2. NO PROPOSED CHANGES TO EXISTING (1) PREFABRICATED EQUIPMENT SHELTER (10'-0" x 14'-0") W/ 2 'ETS' CABINETS
3. EXISTING EQUIPMENT SHELTER ACCESS DOOR
4. EXISTING TELCO PANEL
5. EXISTING LIG BOX MOUNTED ON SHELTER WALL
6. EXISTING DRYWELL FILLED W/ GRAVEL
7. EXISTING LIGHT STANDARD
8. EXISTING CONCRETE 6" WIDE CURB
9. EXISTING TRANSFORMER

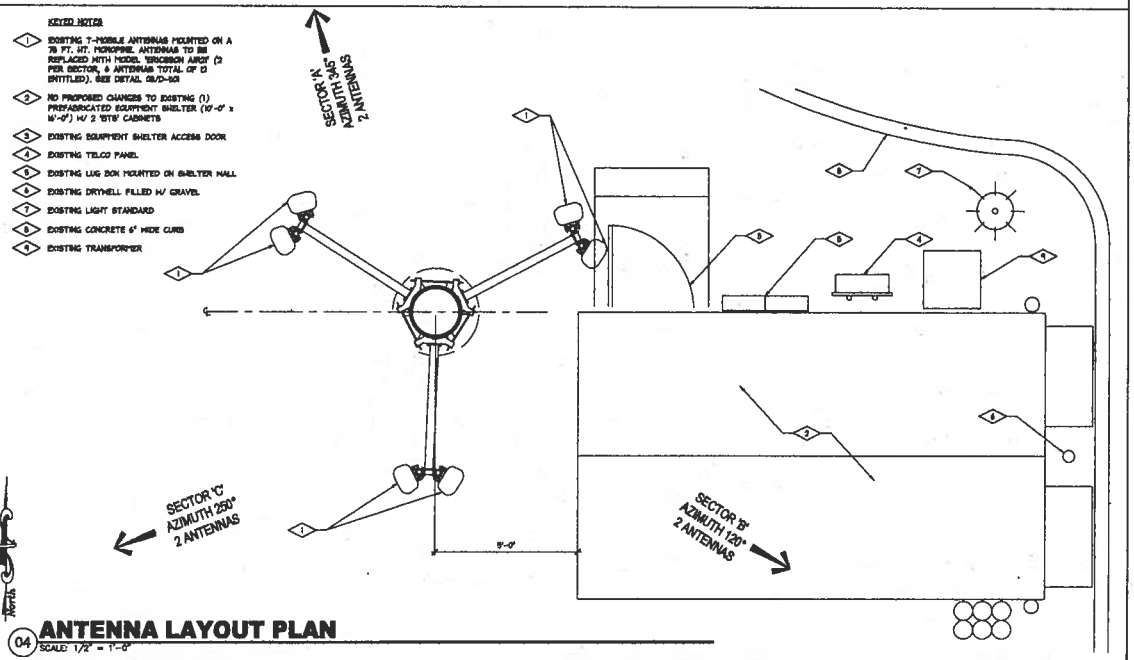

04 ANTENNA LAYOUT PLAN
SCALE: 1/2" = 1'-0"

No.	Revision / Issue	Date
A	90% ZD Review	08-22-12
B	Planning Comments	01-04-13
C	Planning Comments	03-13-13
D	Client Comments	05-09-13

MITCHELL J. ARCHITECTURE, INC.
402 Camino El Molino, Suite B
El Cajon, CA 92021
619.820.5110 (tel) / 888.820.5110 (fax)

Mitchell J. architecture

T··Mobile·
TRESCAPES INTERNATIONAL
SD05204A
4039 AVENIDA DE LA PLATA
OCEANSIDE, CA 92056
1050A VISTA SORRENTO
SAN DIEGO, CA 92121

ANTENNA DETAILS AND SPECS.

LICENSED ARCHITECT
MITCHELL J. CUMMINS
No. C 30395
REN. 8-31-13
STATE OF CALIFORNIA

Project	
Date	08-22-12
Drawn by	cdl, ts
Checked by	mjc
Scale	AS SHOWN

Mitchell J. Architecture

D-501

CUP12-00036

T-Mobile

SD06204 Coverage (70 ft – Current RAD Center)

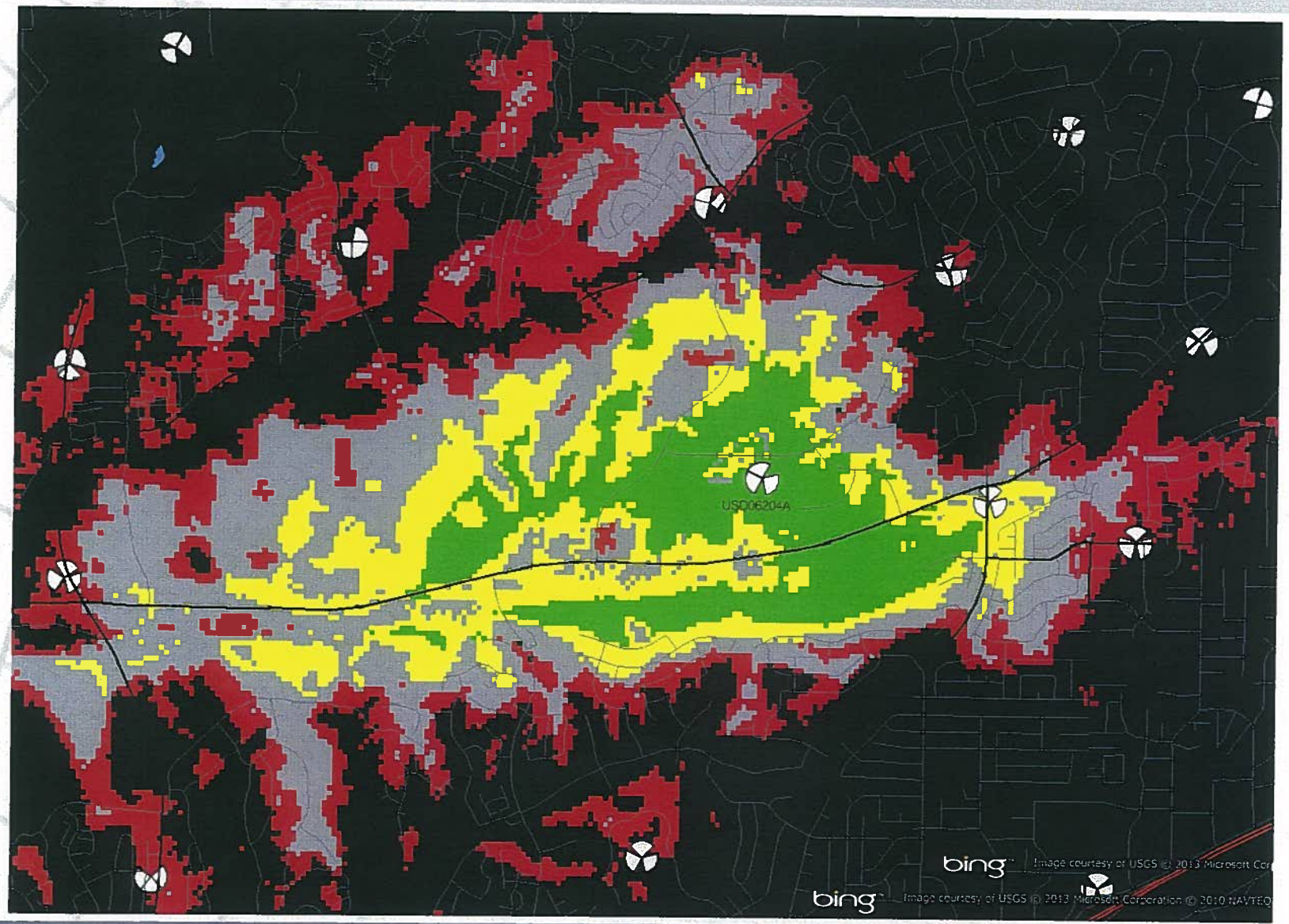

Legend: Coverage Level

- In Building Commercial
- In Building Residential
- In Car
- Outdoor
- Poor to No Signal
- No Coverage

T-Mobile

SD06204 with On Air neighbor sites coverage (55 ft.)

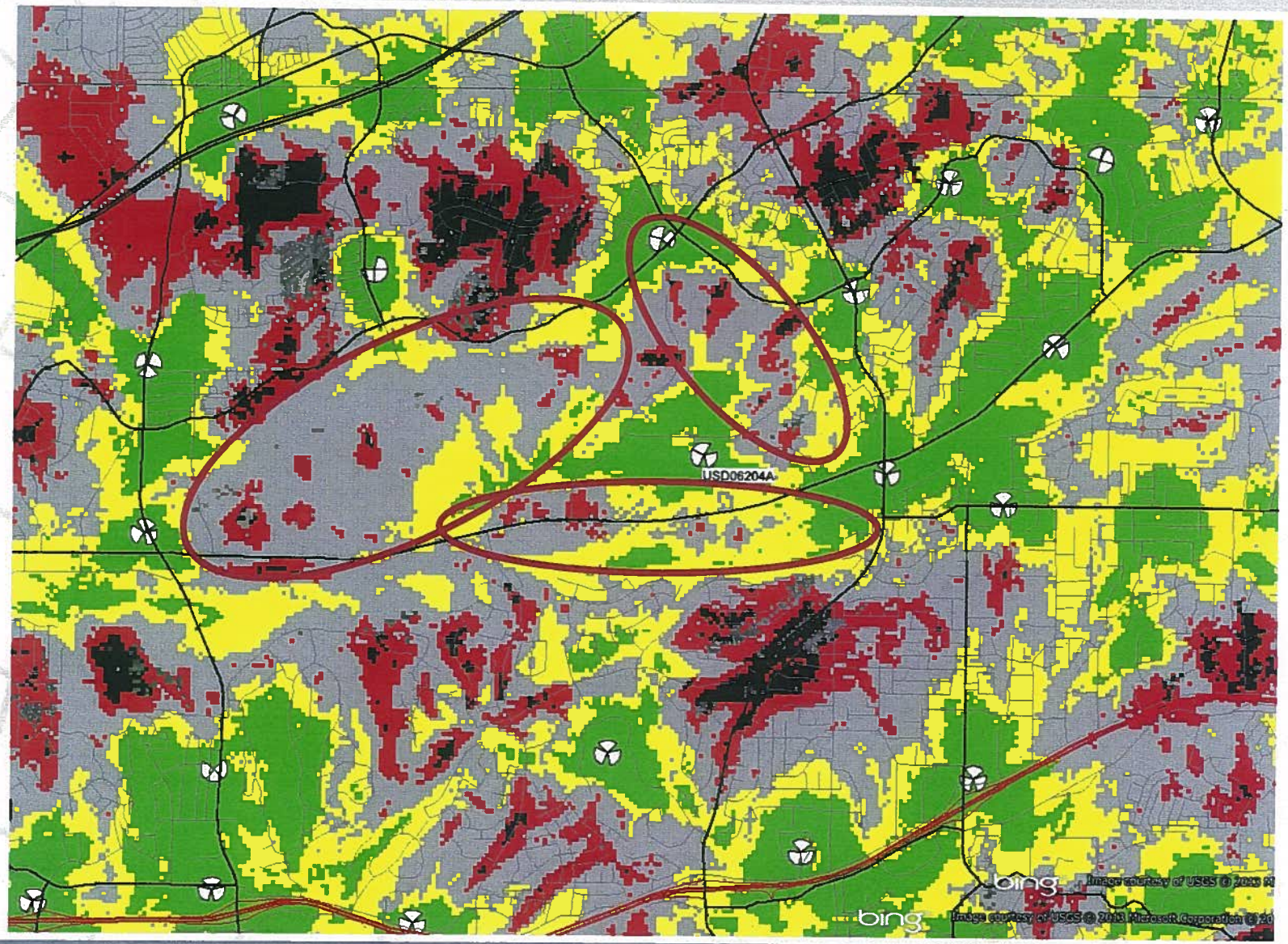

Legend: Coverage Level

- In Building Commercial
- In Building Residential
- In Car
- Outdoor
- Poor to No Signal
- No Coverage

T-Mobile

SD06204 Coverage (55 ft)

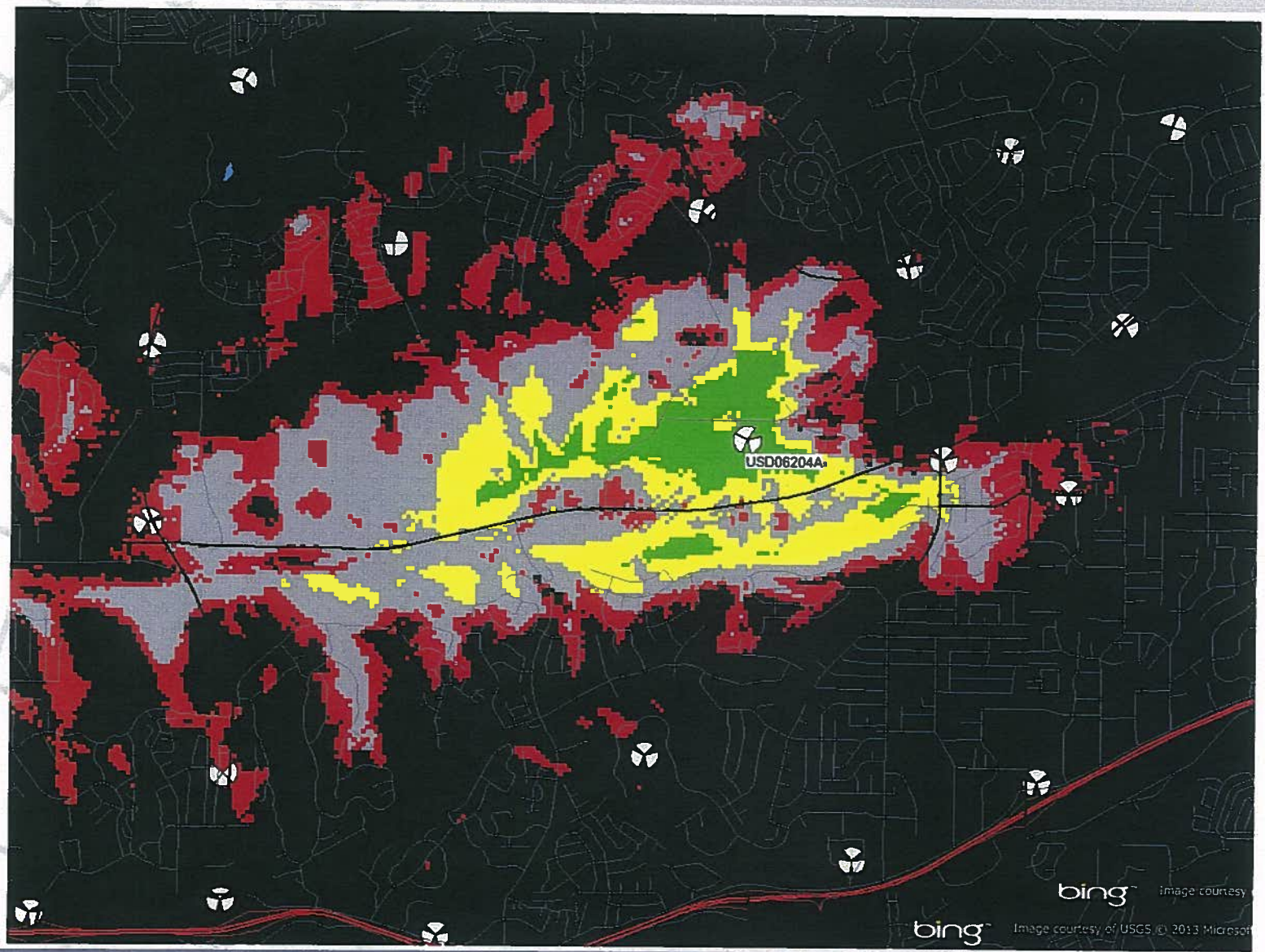

Legend: Coverage Level

- In Building Commercial
- In Building Residential
- In Car
- Outdoor
- Poor to No Signal
- No Coverage

T-Mobile

SD06204 with On Air neighbor sites coverage (Current RAD Center 70 ft)

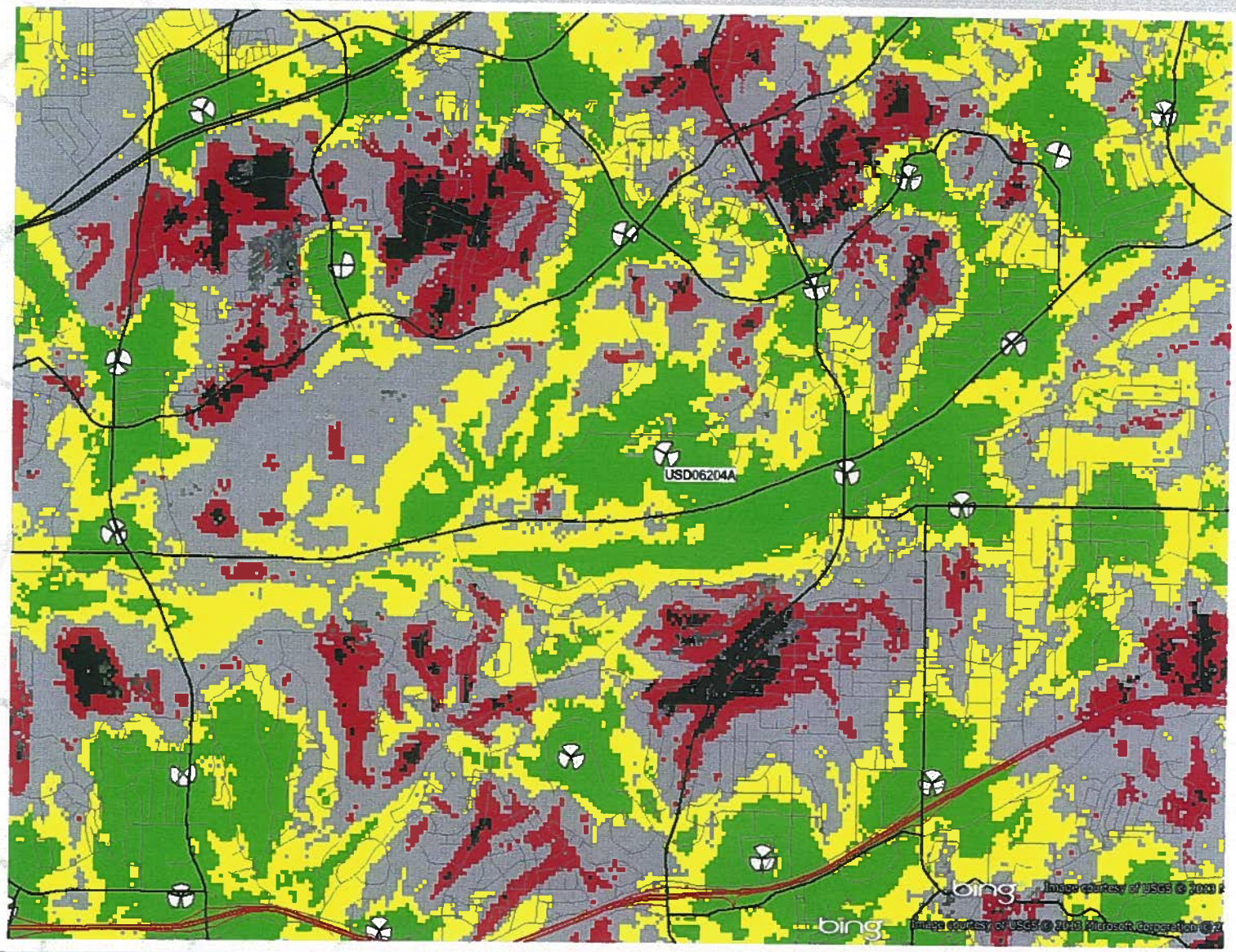

Legend: Coverage Level

- In Building Commercial
- In Building Residential
- In Car
- Outdoor
- Poor to No Signal
- No Coverage

T-Mobile

On Air neighbor sites coverage

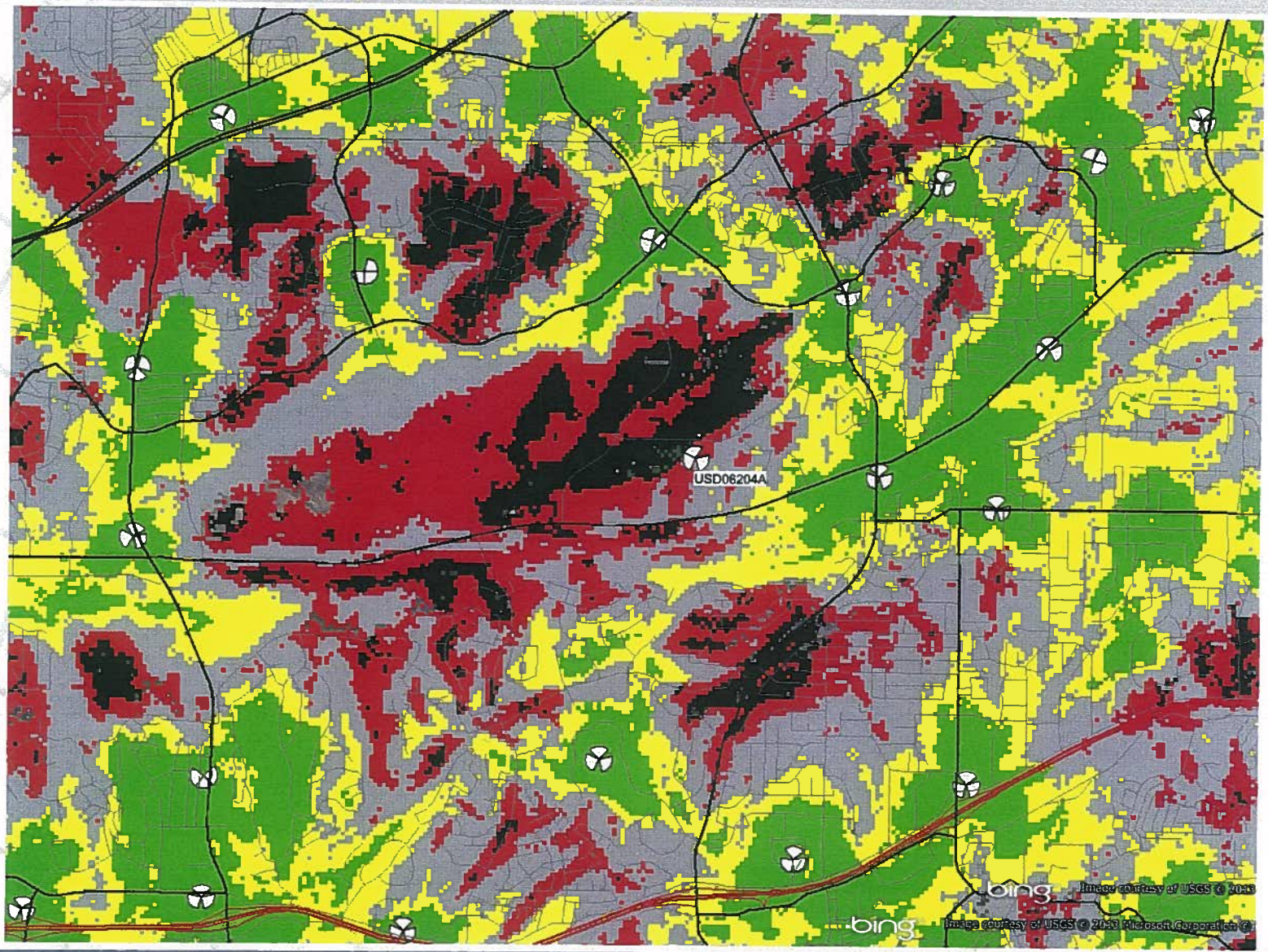

Legend: Coverage Level

In Building Commercial	In Car	Poor to No Signal
In Building Residential	Outdoor	No Coverage

NOTICE OF EXEMPTION

City of Oceanside, California

Post Date: 07/23/2013
Removal: 01/23/2014
(180 days)

1. **APPLICANT:** T-Mobile West Corporation
2. **ADDRESS:** 10509 Vista Sorrento Parkway, San Diego CA 92121
3. **PHONE NUMBER:** (858) 334-6139
4. **LEAD AGENCY:** City of Oceanside
5. **PROJECT MGR.:** Sally Schifman
6. **PROJECT TITLE:** T-Mobile @ 4039 Avenida de la Plata (CUP12-00036 and CUP13-00023)
7. **DESCRIPTION:** Consideration of Conditional Use Permits (CUP12-00036 and CUP13-00023) for the continued operation of a stand-alone wireless communications facility, with upgrades necessary to accommodate fourth generation (4G) wireless technologies. Specific facility upgrades consist of the removal of six (6) existing antennas and the installation of six (6) out of twelve (12) new antennas on a monopole disguised as a pine tree.

ADMINISTRATIVE DETERMINATION: Planning Division staff has completed a preliminary review of this project in accordance with the City of Oceanside's Environmental Review Guidelines and the California Environmental Quality Act (CEQA), 1970. Therefore, the Environmental Coordinator has determined that further environmental evaluation is not required because:

[x] The project is categorically exempt, Class 1, Existing Facility (Section 15301); or,

[ ] The activity is covered by the general rule that CEQA applies only to projects which have the potential for causing a significant effect on the environment. Where it can be seen with certainty that there is no possibility that the activity in question may have a significant effect on the environment, the activity is not subject to CEQA (Section 15061(b)(3)); or,

[ ] The project is statutorily exempt, Section , <name> (Sections 15260-15277); or,

[ ] The project does not constitute a "project" as defined by CEQA (Section 15378).

Date: July 23, 2013

Sally Schifman, Consulting Assistant

cc: [x] Project file [x] Counter file [ ] Library
Posting: [ ] County Clerk $50.00 Admin. Fee

PLANNING COMMISSION
RESOLUTION NO. 2013-P37

A RESOLUTION OF THE PLANNING COMMISSION OF THE CITY OF OCEANSIDE, CALIFORNIA APPROVING TWO CONDITIONAL USE PERMITS FOR CERTAIN REAL PROPERTY IN THE CITY OF OCEANSIDE

APPLICATION NO:	CUP12-00036 and CUP13-00023
APPLICANT:	T-Mobile West Corporation
LOCATION:	4039 Avenida de la Plata

THE PLANNING COMMISSION OF THE CITY OF OCEANSIDE, CALIFORNIA DOES RESOLVE AS FOLLOWS:

WHEREAS, there was filed with this Commission a verified petition on the forms prescribed by the Commission requesting two Conditional Use Permits under the provisions of Articles 39 and 41 of the Zoning Ordinance of the City of Oceanside to permit the following:

the continued operation of a wireless communications facility on an existing faux pine tree, with upgrades necessary to accommodate fourth generation (4G) wireless technologies as described in the Description and Justification and shown on plans dated May 9, 2013;

on certain real property described in the project description.

WHEREAS, the Planning Commission, after giving the required notice, did on the 22nd day of July, 2013 conduct a duly advertised public hearing as prescribed by law to consider said application.

WHEREAS, pursuant to the California Environmental Quality Act of 1970, and State Guidelines thereto; this project is categorically exempt from CEQA per Article 19, Section 15301 Existing Facilities;

WHEREAS, the documents or other material which constitutes the record of proceedings upon which the decision is based will be maintained by the City of Oceanside Planning Division, 300 North Coast Highway, Oceanside, California 92054.

WHEREAS, pursuant to Oceanside Zoning Ordinance §4603, this resolution becomes effective 10 days from the date of its adoption in the absence of the filing of an appeal or call for review;

WHEREAS, studies and investigations made by this Commission and in its behalf reveal the following facts:

FINDINGS:

For the Conditional Use Permit (CUP12-00036):

1. The placement, construction, or modification of the wireless communications facility in the proposed location is necessary for the provision of wireless services to City residents, businesses, and their owners, customers, guests or other persons traveling in or about the city. The upgraded equipment will accommodate necessary fourth generation (4G) wireless technologies and facilitates the continued operation of a wireless communications facility.

2. The proposal demonstrates a reasonable attempt to minimize stand-alone facilities, is designed to protect the visual quality of the City, and will not have an undue adverse impact on historic resources, scenic views, or other natural or man-made resources. The project site is in a developed industrial area. The proposed antenna upgrades would be completely concealed from public view within a monopine.

3. Coverage maps were provided by the applicant demonstrating the need to maintain the subject facility on the service grid as it currently exists. It was clearly shown that requiring collocation of this site would negatively impact the applicant's ability to provide services to its customers. The existing facility has not generated community concern and allowing it to remain in its current location is the least intrusive means of providing continued coverage for this provider in this area.

4. All applicable requirements and standards of Article 39 will be met by the proposed project either as designed or as implemented in accordance with the Conditions of Approval.

For the Conditional Use Permit (CUP13-00023):

1. The proposed facility will have a lesser impact on the aesthetics and welfare of the surrounding community as compared to other alternatives. Allowing the facility to remain in its current location, at a height of 78 feet, is the least intrusive means of providing continued coverage by this provider in this area. Relocating this facility would require the removal of the existing monopine, which was initially approved based on a comprehensive, multi-monopine design for the multi-carrier property. The removal of one of the

monopines would undermine the camouflage effectiveness of the onsite wireless facilities as a whole.

2. The proposed height is reasonably necessary for the efficient operation of the facility with collocation in the future. Additional wireless service providers could utilize the subject facility at a maximum height of 55 feet.

3. Any negative impacts of the proposed facility have been properly mitigated. The proposed antenna upgrades will be concealed from public view within a 78-foot faux pine tree and will be well integrated among existing trees and three other monopines. The project is conditioned to comply with specific requirements pertaining to its appearance and maintenance to ensure that the project maintains its high aesthetic value and land use compatibility.

4. The proposed 78-foot communication facility is located on the same property as three other monopine communication facilities, which are between 70 and 80 feet in height. Many other trees of varying heights exist on-site. Maintaining the existing 78-foot monopine will be consistent with the existing environment. As such, the project site is consistent with the General Plan policies for visual conformity to surrounding land uses and features while still providing communication, broadcast, and subscription services to the public.

5. The project is conditioned to comply with specific requirements pertaining to its appearance and maintenance to ensure the project maintains high aesthetic quality and land use compatibility.

6. The proposed location and operation of the communication facility, as conditioned, will be consistent with the effective land use policies and would not be detrimental to the public health or general welfare of persons residing or working in the area.

NOW, THEREFORE, BE IT RESOLVED that the Planning Commission does hereby approve Conditional Use Permit (CUP12-00036) and Conditional Use Permit (CUP13-00023) subject to the following conditions:

Building:

1. Applicable Building Codes and Ordinances shall be based on the date of submittal for Building Division plan check.

2. The granting of approval under this action shall in no way relieve the applicant/project from compliance with all State and Local building codes.

3. The building plans for this project are required by State law to be prepared by a licensed architect or engineer and must be in compliance with this requirement prior to submittal for building plan review.

4. Site development, parking, access into buildings and building interiors shall comply with the State's Disabled Accessibility Regulations. (2010 CBC Chapter 11B).

5. A separate/unique address shall be required to facilitate utility releases. Verification that the address has been properly assigned by the City's Planning Division must accompany the Building Permit application.

6. The developer shall monitor, supervise and control all building construction and supporting activities so as to prevent these activities from causing a public nuisance, including, but not limited to, strict adherence to the following:

   a) Building construction work hours shall be limited to between 7:00 a.m. and 6:00 p.m. Monday through Friday, and on Saturday from 7:00 a.m. to 6:00 p.m. for work that is not inherently noise-producing. Examples of work not permitted on Saturday are concrete and grout pours, roof nailing and activities of similar noise-producing nature. No work shall be permitted on Sundays and Federal Holidays (New Year's Day, Memorial Day, July 4th, Labor Day, Thanksgiving Day, Christmas Day) except as allowed for emergency work under the provisions of the Oceanside City Code Chapter 38 (Noise Ordinance).

   b) The construction site shall be kept reasonably free of construction debris as specified in Section 13.17 of the Oceanside City Code. Storage of debris in approved solid waste containers shall be considered in compliance with this requirement. Small amounts of construction debris may be stored on-site in a neat, safe manner for short periods of time pending disposal.

Fire:

7. The quantity of lead acid batteries and their electrolyte volume(s) shall be indicated on the construction plans.

8. Stationary Storage Battery Systems having an electrolyte capacity of more than 50 gallons for flooded lead acid, nickel cadmium and valve regulated lead acid, or 1000 pounds for lithium-ion, used for facility standby power, emergency power or uninterrupted power supplies shall comply with Section 608 of the California Fire Code current edition, and Table 608.1. If the quantity of electrolyte solution is 10 gallons or greater, visible hazard identification signs, as specified in NFPA 704, shall be placed at the entrance to the battery storage room.

9. Prior to activation, the facility shall have a final inspection by the Fire Department.

Planning:

10. Conditional Use Permit (CUP12-00036) and Conditional Use Permit (CUP13-00023) are granted for the continued operation of a stand-alone wireless communications facility, with upgrades necessary to accommodate 4G wireless technologies. The facility exceeds the height limits for the underlying zone pursuant to CUP13-00023. Any substantial change in the use or expansion of the wireless communications facility beyond that which is approved by the Planning Commission, shall require a revision to the Conditional Use Permits or new Conditional Use Permits.

11. Conditional Use Permits CUP12-00036 and CUP13-00023 shall expire July 22, 2015 unless the applicant has obtained a Building Permit and has requested an initial building inspection.

12. Entitlements granted for Conditional Use Permits CUP12-00036 and CUP13-00023 and approved by this resolution, shall be valid until July 26, 2019.

13. Unless expressly waived, all current zoning standards and City ordinances and policies in effect at the time of building permit issuance shall be met by this project. The approval of this project, as conditioned herein, constitutes the applicant's agreement with all statements in the project Description and Justification and other materials and information submitted with this application, unless specifically waived by an adopted condition of approval.

14. The wireless communications facility permitted by this Resolution shall be operated and maintained in compliance with Article 39.

15. The installation of any wireless communications facility shall be in compliance with all applicable provisions of the State Building Standards Code and any applicable local amendments thereto.

16. No wireless communications facility may, by itself or in conjunction with other wireless communications facilities, generate radio frequency (RF) emissions in excess of the standards for permissible human exposure, as provided by applicable federal regulations including 47 C.F.R. 1.1307 *et seq*.

17. Upon or prior to installation, and prior to activation, of the wireless communications facility, the applicant shall submit to the City certification in a form acceptable to the City that the facility will operate in compliance with all applicable Federal Communications Commission (FCC) regulations including, but not limited to, RF emission limitations. At the City's sole discretion, a qualified independent RF engineer, selected by and under contract to the City, may be retained to review said certifications for compliance with FCC regulations. All costs associated with the City's review of these certifications shall be the responsibility of the applicant. FCC compliance certifications shall be subject to review and approval by the City Planner.

18. Within 30 calendar days following the installation of this wireless communications facility, the applicant shall provide FCC documentation to the City Planner indicating that the unit has been inspected and tested in compliance with FCC standards. Such documentation shall include the make and model (or other identifying information) of the unit tested, the date and time of the inspection, the methodology used to make the determination, the name and title of the person(s) conducting the tests, and a certification that the unit is properly installed and working within applicable FCC standards.

19. Upon any proposed increase of a least 10 percent in the effective radiated power or any proposed change in frequency use, the applicant shall submit updated certifications for review by the City. Update certifications shall be subject to review and approval by the City Planner.

20. The applicant shall maintain the most current information from the FCC regarding the allowable RF emissions and all other applicable regulations and standards. The applicant/operator shall file an annual report to the permit file advising the City of any

regulatory changes that require modifications to the wireless communications facility and of the measures taken by the applicant to comply with such regulatory changes.

21. Absent any modifications to the wireless communications facility that would cause a change to the effective radiated power or frequency use, the applicant shall submit an annual letter to the City Planner certifying that no such changes have been made to the site and that the facility continues to operate within the range allowed by FCC regulations.

22. Any substantial change in the type of antenna and/or facility installed in a particular location shall require the prior approval of the City Planner or his designee. Failure to obtain the prior approval of the City Planner or his designee may be grounds for institution of revocation proceedings as well as grounds to institute any other enforcement action available under federal, state, or local law.

23. Public access to the subject wireless communications facility shall be restricted. Required security measures shall be provided as follows:

    a) RF advisory signage shall be installed at access point(s) or path(s) to the antennas and/or at each sector to establish awareness for potential exposure.

24. All required and proposed signage shall be shown on approved building plans.

25. The permittee(s) shall exercise a good-faith effort to incorporate the best available equipment technology to effect a reduction in the visual presence of the approved antennas and equipment. Any modifications requested to this facility shall permit the City Planner or his designee to review the existing facility to determine whether requiring new equipment or applying new screening techniques that reduce visual impacts is appropriate, if technically feasible. Upon the City's request and discretion, the permittee(s) shall be required to provide an independently prepared technical analysis demonstrating compliance with this condition. The permittee(s) inability to demonstrate the use of current technologies may be grounds for the institution of revocation proceedings of the Conditional Use Permits.

26. Co-location of wireless communications facilities pursuant to Article 39 shall be required whenever feasible. The permittee(s) shall exercise a good-faith effort to cooperate with other communication providers and services in the operation of a multiple-provider facility, provided such shared usage does not impair the operation of

the approved facility. Upon the City's request and discretion, the permittee(s) shall provide an independently prepared technical analysis to substantiate the existence of any technical prohibitions against the operation of a co-use facility. The permittee(s)' non-compliance with this requirement may be grounds for the institution of revocation proceedings of the Conditional Use Permits.

27. A Maintenance and Facility Removal Agreement shall be executed by the operator and the property owner. Proof of such agreement shall be submitted to the City prior to the issuance of building permits. Said agreement shall bind the operator and property owner and their successors and assigns to the facility to the following:

a) Maintain the facility in good condition, which shall include but not be limited to regular cleaning, painting, and general upkeep and maintenance of the site;

b) Remove the facility when required by Article 39 or by any condition of approval, or when it is determined that the facility will not have been used during any current consecutive six-month period, or if the facility will be abandoned;

c) Pay all costs the City reasonably incurs to monitor a facility's compliance with conditions of approval and applicable law;

d) Reimburse the City for any and all costs incurred for work required by Article 39, applicable law, or the conditions of a permit issued by the City for the facility which the operator and property owner fail to perform within 30 days after written notice from the City to do so or sooner if required by the City for good cause;

e) Where the City Planner or Planning Commission or City Council, as the case may be, determines that it is necessary to ensure compliance with the conditions of approval or otherwise provide for removal of the facility that is temporary in nature or upon its disuse, the operator or owner may be required to post a performance bond, cash or a letter of credit or other security acceptable to the City Planner in the amount of $10,000, or such higher amount as the City Planner reasonably determines is necessary to ensure compliance with the maintenance and facility removal agreement.

28. The wireless communications facility shall include signage approved by the City Planner identifying the name and phone number of a party to contact in the event of an emergency. Such signage shall comply with any applicable provisions of Article 39 and Article 33 (sign ordinance).

29. The wireless communications facility and the site on which it is located shall be maintained in good repair, free from trash, debris, litter and graffiti and other forms of vandalism. Any damage from any cause shall be corrected within five days of written notice by the City. Graffiti shall be removed as soon as practicable, and in no event longer than 48 hours after notice by the City.

30. The wireless communications facility shall be operated to minimize noise impacts to surrounding residents and persons using nearby facilities and recreation areas. All equipment that may emit noise in excess of the levels permitted by Article 38 of the City Municipal Code (noise ordinance) shall be enclosed. Backup generators shall only be used during periods of power outages or for testing.

31. Temporary power may be allowed during the initial construction or major repair of a facility for the minimal amount of time necessary to complete the work. The operator shall provide a timeline to the City Planner and keep staff updated as to the time of completion.

32. The wireless communications facility shall be installed and maintained in compliance with the requirements of the Uniform Building Code, National Electrical Code, noise ordinance, and other applicable codes, as well as other restrictions specified in Article 39.

33. These Conditional Use Permits may be revised in accordance with the provisions of the Zoning Ordinance. Any application for a revision to Conditional Use Permits CUP12-00036 and/or CUP13-00023 shall be evaluated against the existing land use policies and any site area and neighborhood changes.

34. Conditional Use Permits CUP12-00036 and CUP13-00023 may be called for review by the Planning Commission if complaints are filed and verified as valid by the City Planner or Code Enforcement Officer concerning the violation of any of the approved conditions or the project assumptions demonstrated under the application approval.

35. All costs reasonably incurred by the City in verifying compliance and in extending or revoking an approval shall be borne by the applicant and/or permit holder.

36. Failure to meet any conditions of approval for this development shall constitute a violation of these Conditional Use Permits. Conditional Use Permits CUP12-00036 and CUP13-00023 may be revoked pursuant to Article 47 of the Zoning Ordinance.

37. If the operator of this facility intends to abandon or discontinue the use of this facility, the City shall be notified of such intention no less than sixty (60) days prior to the final day of use.

38. If the use of this facility is discontinued, it shall be considered abandoned 90 days following the final day or use.

39. All abandoned facilities shall be physically removed by the operator no more than 90 days following the final day of use or of determination that the facility has been abandoned, whichever occurs first. When a wireless communications facility has been abandoned, but not removed, the City may cause such facilities to be removed and charge all expenses incurred in such removal to the provider.

40. The wireless communications facility shall be subject to, and governed by, any and all licensing authority by any governmental agency having jurisdiction. The City's local approval of the facility shall not exempt the permittee(s) from any such pre-emptive regulations.

41. Prior to the transfer of ownership and/or operation of the use, the owner and/or operator shall provide a written copy of the application, staff report, and resolution for the project to the new owner and/or operator. This notification requirement shall run with the life of the project.

//////////

//////////

//////////

//////////

//////////

//////////

//////////

//////////

42. A covenant or other recordable document approved by the City Attorney shall be prepared by the applicant and recorded prior to the issuance of building permits. The covenant shall provide that the property is subject to this resolution, and shall generally list the conditions of approval.

PASSED AND ADOPTED Resolution No. 2013-P37 on July 22, 2013 by the following vote, to wit:

AYES:

NAYS:

ABSENT:

ABSTAIN:

_____

Robert Neal, Chairperson
Oceanside Planning Commission

ATTEST:

_____

Marisa Lundstedt, Secretary

I, MARISA LUNDSTEDT, Secretary of the Oceanside Planning Commission, hereby certify that this is a true and correct copy of Resolution No. 2013-P37.

Dated: July 22, 2013

CUP12-00036

SD06204 Treescapes International

e-mail: Lynnea.Barrett@mitchellj.com

Application for Discretionary Permit

Development Services Department / Planning Division
(760) 435-3520
Oceanside Civic Center 300 North Coast Highway
Oceanside, California 92054-2885

Developer Deposit Account
DDA# 100667 T-MOBILE RENEWAL

STAFF USE ONLY	
ACCEPTED 12/5/12	BY SW ‡ TM SS
HEARING	
GPA	
MASTER/SP.PLAN	
ZONE CH.	
TENT. MAP	
PAR. MAP	
DEV. PL.	
C.U.P. ACUP12-00020	
VARIANCE	
COASTAL	
O.H.P.A.C.	

Please Print or Type All Information

PART I – APPLICANT INFORMATION

1. APPLICANT	2. STATUS
T-Mobile West Corporation	Lessee
3. ADDRESS	**4. PHONE/FAX/E-mail**
10509 Vista Sorrento Pkwy San Diego, CA 92121	(858) 334-6139
5. APPLICANT'S REPRESENTATIVE (or person to be contacted for information during processing)	
Lynnea Barrett, Mitchell J Architecture	
6. ADDRESS	**7. PHONE/FAX/E-mail**
4883 Ronson Ct, Ste N San Diego, CA 92111	(858) 650-3130 (858) 650-3140 (fax)

PART II – PROPERTY DESCRIPTION

8. LOCATION	9. SIZE
4039 Avenida de la Plata, Oceanside, CA 92058	

10. GENERAL PLAN	11. ZONING	12. LAND USE	13. ASSESSOR'S PARCEL NUMBER
	PD-1	industrial	162-503-28

14. LATITUDE	15. LONGITUDE
33°12'26.84N	117°17'48.53W

PART III – PROJECT DESCRIPTION

16. GENERAL PROJECT DESCRIPTION
Renew zoning permit for T-Mobile wireless communication facility. T-Mobile also proposes to replace existing antennas with antennas in same quantity, dimension, and physical characteristic

17. PROPOSED GENERAL PLAN	18. PROPOSED ZONING	19. PROPOSED LAND USE	20. NO. UNITS	21. DENSITY
N/A	N/A	no change	N/A	N/A

22. BUILDING SIZE	23. PARKING SPACES	24. % LANDSCAPE	25. % LOT COVERAGE or FAR
N/A	N/A	N/A	N/A

PART IV – ATTACHMENTS

26. DESCRIPTION/JUSTIFICATION	27. LEGAL DESCRIPTION	28. TITLE REPORT
29. NOTIFICATION MAP & LABELS	30. ENVIRONMENTAL INFO FORM	31. PLOT PLANS
32. FLOOR PLANS AND ELEVATIONS	33. CERTIFICATION OF POSTING	34. OTHER (See attachment for required reports)

PART V – SIGNATURES

SIGNATURES FROM ALL OWNERS OF THE SUBJECT PROPERTY ARE NECESSARY BEFORE THE APPLICATION CAN BE ACCEPTED. IN THE CASE OF PARTNERSHIPS OR CORPORATIONS, THE GENERAL PARTNER OR CORPORATION OFFICER SO AUTHORIZED MAY SIGN. (ATTACH ADDITIONAL PAGAES AS NECESSARY).

35. APPLICANT OR REPRESENTATIVE (Print):	36. DATE	37. OWNER (Print)	38. DATE
Lynnea Barrett	10/12/12	please see attached letter of authorization	
Sign: Lynnea Barrett		Sign:	

- **I DECLARE UNDER PENALTYOF PERJURY THAT THE ABOVE INFORMATION IS TRUE AND CORRECT. FURTHER, I UNDERSTANDING THAT SUBMITTING FALSE STATEMENTS OR INFORMATION IN THIS APPLICATION MAY CONSTITUTE FRAUD, PUNISHABLE IN CIVIL AND CRIMINAL PROCEEDINGS.**
- **I HAVE READ AND AGREE TO ABIDE BY THE CITY OF OCEANSIDE DEVELOPMENT SERVICES DEPARTMENT AND ECONOMIC AND COMMUNITY DEVELOPMENT DEPARTMENT POLICY NO. 2011-01/POLICY AND PROCEDURE FOR DEVELOPMENT DEPOSIT ACCOUNT ADMINISTRATION.**

Application for Discretionary Permit

Development Services Department / Planning Division
(760) 435-3520
Oceanside Civic Center 300 North Coast Highway
Oceanside, California 92054-2885

STAFF USE ONLY

ACCEPTED

RECEIVED
MAY 15 2013
CITY OF OCEANSIDE
DEVELOPMENT SERVICES

BY

Please Print or Type All Information

HEARING

PART I – APPLICANT INFORMATION

1. APPLICANT	2. STATUS
3. ADDRESS	4. PHONE/FAX/E-mail
5. APPLICANT'S REPRESENTATIVE (or person to be contacted for information during processing) Anne Regan, agent for T-Mobile	
6. ADDRESS 10183 Avenida Magnifica, San Diego, CA 92131	7. PHONE/FAX/E-mail [illegible]@depratlaw.com

	GPA
	MASTER/SP.PLAN
	ZONE CH.
	TENT. MAP
	PAR. MAP
	DEV. PL.
	C.U.P.
	VARIANCE
	COASTAL
	O.H.P.A.C.

PART II – PROPERTY DESCRIPTION

8. LOCATION	9. SIZE

10. GENERAL PLAN	11. ZONING	12. LAND USE	13. ASSESSOR'S PARCEL NUMBER

14. LATITUDE	15. LONGITUDE

PART III – PROJECT DESCRIPTION

16. GENERAL PROJECT DESCRIPTION

17. PROPOSED GENERAL PLAN	18. PROPOSED ZONING	19. PROPOSED LAND USE	20. NO. UNITS	21. DENSITY
22. BUILDING SIZE	23. PARKING SPACES	24. % LANDSCAPE	25. % LOT COVERAGE or FAR	

PART IV – ATTACHMENTS

	26. DESCRIPTION/JUSTIFICATION		27. LEGAL DESCRIPTION		28. TITLE REPORT
	29. NOTIFICATION MAP & LABELS		30. ENVIRONMENTAL INFO FORM		31. PLOT PLANS
	32. FLOOR PLANS AND ELEVATIONS		33. CERTIFICATION OF POSTING		34. OTHER (See attachment for required reports)

PART V – SIGNATURES

SIGNATURES FROM ALL OWNERS OF THE SUBJECT PROPERTY ARE NECESSARY BEFORE THE APPLICATION CAN BE ACCEPTED. IN THE CASE OF PARTNERSHIPS OR CORPORATIONS, THE GENERAL PARTNER OR CORPORATION OFFICER SO AUTHORIZED MAY SIGN. (ATTACH ADDITIONAL PAGAES AS NECESSARY).

35. APPLICANT OR REPRESENTATIVE (Print):	36. DATE	37. OWNER (Print)	38. DATE
ANNE REGAN	4/24/13		
Sign: Anne Regan		Sign:	

- **I DECLARE UNDER PENALTY OF PERJURY THAT THE ABOVE INFORMATION IS TRUE AND CORRECT. FURTHER, I UNDERSTANDING THAT SUBMITTING FALSE STATEMENTS OR INFORMATION IN THIS APPLICATION MAY CONSTITUTE FRAUD, PUNISHABLE IN CIVIL AND CRIMINAL PROCEEDINGS.**
- **I HAVE READ AND AGREE TO ABIDE BY THE CITY OF OCEANSIDE DEVELOPMENT SERVICES DEPARTMENT AND ECONOMIC AND COMMUNITY DEVELOPMENT DEPARTMENT POLICY NO. 2011-01/POLICY AND PROCEDURE FOR DEVELOPMENT DEPOSIT ACCOUNT ADMINISTRATION.**

CUP12-00036

Mitchell J
architecture

BOARD
MEMBERS

Mitchell J.
Campagna, RA
CEO

Bodie C. Campagna
CFO

PROJECT DESCRIPTION & JUSTIFICATION

T-MOBILE SD06204A, TREESCAPES INTERNATIONAL

To: City of Oceanside
Development Services Department / Planning Division
Oceanside Civic Center
300 North Coast Highway
Oceanside, CA 92054-2885

From: Lynnea Barrett
Mitchell J Architecture
4883 Ronson Court, Suite N
San Diego, CA 92111

T-Mobile currently operates a wireless communication facility located at 4039 Avenida de la Plata, Oceanside, CA 92056 ("Subject Property"). The existing T-Mobile facility was originally approved on July 26, 2004 under Conditional Use Permit C-22-03; Planning Commission Resolution No. 2004-P37. The site is approved for a total of twelve (12) antennas and ground equipment. The antennas are located on a 78 foot tall monopine tree. Verizon, Sprint, Nextel, and Cricket also have wireless communication facilities on the Subject Property.

The purpose of this application is to renew the zoning permit for the Subject Property. T-Mobile also proposes to replace existing antennas with six (6) replacement antennas. There are no proposed changes to the existing equipment cabinets.

This site is located in an industrial park behind an existing commercial building. The visual impact to the surrounding community is minimized because all antennas are mounted on a 78 foot monopine designed to simulate the appearance of an actual pine tree. The proposed replacement antennas will have sock covers and will be painted to patch the faux pine needles on the tree. The associated equipment is located in a pre-fabricated equipment shelter near the base of the monopine. In addition, there are three (3) other faux trees with wireless communication facilities on the Subject Property.

Mitchell J
architecture

As depicted in the attached coverage maps, the existing wireless communication facility provides essential communication and improved service to the surrounding area. The facility ensures uninterrupted wireless service in the area. Without the facility at the current location, there would be a significant gap in coverage that would negatively impact the surrounding community.

If you have any additional questions, I can be reached by phone at (858) 650-3130 or by e-mail at lynnea.barrett@mitchellj.com.

Sincerely,

Lynnea Barrett

4883 Ronson Court ▪ Suite N ▪ San Diego ▪ California ▪ 92111 ▪ 858.650.3130 ▪ Fax.650.3140
Mitchell J Architecture, Inc. ▪ A California Corporation ▪ Mitchell J Campagna ▪ Architect ▪ www.mitchellj.com

PROJECT COVERAGE JUSTIFICATION

March 25, 2013

City of Oceanside
Development Services Department / Planning Division
300 North Coast Highway
Oceanside, CA 92054

RE: T-Mobile SD06204A Treescapes International @ 4039 Avenida de la Plata
CUP12-00036 (formerly ACUP 12-00020)

Project Justification (Article 39, Section 3906(H))

As depicted in the attached coverage maps, the existing wireless communication facility provides essential communication and improved service to the surrounding area. The facility ensures uninterrupted wireless service in the area. Without the facility in the current location, there would be a significant gap in coverage that would negatively impact the surrounding community. This is primarily a commercial area with businesses. T-Mobile was originally approved for 12 antennas and would like to maintain the entitlements for the previously approved 12 antennas. With the current application T-Mobile is proposing to replace 6 of the 12 previously entitled antennas.

The first map illustrates the coverage provided by the site alone. The green and yellow areas represent indoor coverage provided by the site and the gray area represents coverage provided to vehicles travelling in the area. As shown on the map, this site provides indoor coverage to businesses in the Rancho del Oro Industrial Park area, particularly along Avenida de la Plata and Corporate Center Drive. The site also provides extensive coverage to vehicles traveling along Oceanside Boulevard between Rancho Del Oro Drive and College Boulevard.

The second map illustrates the coverage without the site on air. The white area represents no coverage and the black area represents poor to no signal. The red area represents outdoor coverage. Without the site, there is no coverage or poor to no signal in a majority of the Rancho del Oro Industrial Park area both north and south of Oceanside Boulevard.

10183 Avenida Magnifica, San Diego CA 92131
858.602.6522 phone 858.536.1005 fax
aregan@deprattiinc.com

The third map illustrates the coverage provided by the site in combination with coverage provided by neighboring T-Mobile sites in the area. The areas covered by these sites overlap so a call can pass seamlessly from one cell site to another as a caller moves around. As depicted on the map, coverage is greatly improved along well-traveled routes including Oceanside Boulevard and Avenida de la Plata.

Replacement antennas are needed in order to keep pace with increasing consumer demand and prevent dropped calls, poor call clarity, and spotty coverage. With continuous growth in cell phone use and capabilities, providing reliable coverage requires the network infrastructure be continually upgraded.

10183 Avenida Magnifica, San Diego CA 92131
858.602.6522 phone 858.536.1005 fax
aregan@deprattiinc.com

Co-Location (Article 39, Section 3906(J)) — Superceded see June 5, 2013 Justification

T-Mobile shall exercise a good faith effort in co-locating with other communications companies and sharing the permitted site, provided such shared use does not give rise to a substantial technical level or quality of service impairment of the permitted use.

As mentioned in the background section above, the original wireless communication facility, which was owned at the time by Pacific Bell Mobile Services, was initially located on the commercial building. The antennas were façade mounted onto building and the related equipment was on the rooftop. The current monopine tree was built after a new Conditional Use Permit was approved in 2004. At that time, there were two other monopine tree sites on the subject property. However, those trees were built as single carrier trees so T-Mobile was not able to co-locate onto the same trees. Currently, the top of the antennas on the monopine are at about 72 feet and the RAD center of the antennas is at 70 feet. This height is needed to provide coverage to the area and relocating to another structure in the area would result in a loss of antenna height that would impact coverage.

Description of Services Offered (Article 39, Section 3906(K))

This project is part of T-Mobile's Long Term Evolution (LTE) project to upgrade to 4G wireless communication service in the area. 4G service is the term used to describe the fourth-generation of wireless service and is more advanced than 3G wireless service. Upgraded technology is needed to keep pace with consumer demand as more wireless communication subscribers use 4G smartphones, tablets, and other 4G devices to not only make calls, but text, send photos, stream music, watch videos, and search the Internet. 4G technology provides more widespread, high-speed service. The 4G network is designed to provide improved coverage both indoors and outdoors and while traveling in a vehicle. The upgraded technology is also designed to provide more seamless service and fewer dropped calls.

10183 Avenida Magnifica, San Diego CA 92131
858.602.6522 phone 858.536.1005 fax
aregan@deprattiinc.com

SECTION 3906(J) JUSTIFICATION

June 5, 2013

City of Oceanside
Development Services Department / Planning Division
300 North Coast Highway
Oceanside, CA 92054

RE: T-Mobile SD06204A Treescapes International @ 4039 Avenida de la Plata
CUP12-00036 (formerly ACUP 12-00020)

Co-Location (Article 39, Section 3906(J))

T-Mobile shall exercise a good faith effort in co-locating with other communications companies and sharing the permitted site, provided such shared use does not give rise to a substantial technical level or quality of service impairment of the permitted use.

As mentioned in the background section above, the original wireless communication facility, which was owned at the time by Pacific Bell Mobile Services, was initially located on the commercial building. The antennas were façade mounted onto building and the related equipment was on the rooftop. The current monopine tree was built after a new Conditional Use Permit was approved in 2004. At that time, there were two other monopine tree sites on the subject property. However, those trees were built as single carrier trees so T-Mobile was not able to co-locate onto the same trees. Currently, the top of the antennas on the monopine are at about 72 feet and the RAD center of the antennas is at 70 feet. This is a co-locatable tree for at least two other carriers. This height is needed to provide coverage to the area and relocating to another structure in the area would result in a loss of antenna height that would impact coverage. The Nextel and Cricket faux monopine antennas are located at 70'. If T-Mobile were to collocate on either of the Nextel or Cricket trees the RAD center would be lowered to 55', as 10' of separation is required between antennas, which would significantly reduce the current coverage (see attached coverage maps). If T-Mobile had to relocate to one of the other existing faux trees we would not be able to service all of the customers currently getting service and would need to look for a new site location.

10183 Avenida Magnifica, San Diego CA 92131
858.602.6522 phone 858.536.1005 fax
aregan@deprattiinc.com

If required to reduce the antennas height by 15', the amount of affected T-Mobile customers is unavailable as the site is serving an established business park. Customers rarely use their place of business for their billing address, only few registered their billing address within the business park. As mentioned before, antenna height reduction will create coverage holes and more negative effect on signal indoors thus affecting the way people make business during work hours. Business productivity and personal usage would be affected and would result in loss of customers.

In the last 45 days this site has received (19) 911 calls to the Oceanside Police Department. Reduction of coverage on this site would jeopardize 911 assistance to the current customers that have existing service.

10183 Avenida Magnifica, San Diego CA 92131
858.602.6522 phone 858.536.1005 fax
aregan@deprattiinc.com

LEGAL DESCRIPTION

T-MOBILE SD06204A, TREESCAPES INTERNATIONAL

The property is described as follows:

4039 Avenida de la Plata
Oceanside, CA 92056
APN: 162-503-28-00

All that certain real property situated in the County of San Diego, State of California, described as follows:

Parcel Q of Parcel Map No. 12314, in the City of Oceanside, County of San Diego, State of California, filed September 15, 1982 in the Office of the County Recorder of the County of San Diego.