PLANNING COMMISSION

AGENDA NO. 3

CITY OF OCEANSIDE

DATE: January 26, 2015 (Continued from the December 15, 2014 Planning Commission meeting)

TO: Chairperson and Members of the Planning Commission

FROM: Development Services Department/Planning Division

SUBJECT: **CONSIDERATION OF A CONDITIONAL USE PERMIT (CUP14-00010) FOR THE OPERATION AND STORAGE OF TWO 30,000-GALLON PROPANE TANKS FOR AN EXISTING PROPANE RENTAL BUSINESS LOCATED AT 3231-B OCEANSIDE BOULEVARD – PREMIERE PATIO PROPANE – APPLICANT: PREMIERE PATIO HEATING SPECIALISTS, LLC**

RECOMMENDATION

Staff recommends that the Planning Commission by motion:

(1) Confirm issuance of Categorical Exemption Article 19, Class 32 of Section 15332, In-Fill Development projects of the California Environmental Quality Act; and

(2) Adopt Planning Commission Resolution No. 2014-P34 approving Conditional Use Permit CUP14-00010 with findings and conditions of approval attached herein.

BACKGROUND AND PROJECT DESCRIPTION

Background: On March 25, 2014 an application was submitted for a Conditional Use Permit to allow the storage and use of two 30,000-gallon propane tanks at an existing propane rental business known as Premiere Patio Heating Specialists. The site is located at 3231-B Oceanside Boulevard and Premiere Patio Heating Specialists has been in business at this current location since 2009. The business specializes in distributing and renting commercial propane patio heaters. The heaters for rent utilize the typical 20 lb./5.71-gallon propane cylinder tanks for restaurants and businesses.

Site Review: The site is approximately 3.21 acres in size and contains a 6,250-square-foot commercial building that is currently used for office, storage, and maintenance areas for the propane heaters. A 499-gallon outdoor propane storage tank exists on-site and the tank will remain in its current location with the approval of this project. The 499-gallon tank is used in association with the fill station for refilling smaller tanks for distribution to customer locations. A temporary/mobile 10,000-gallon tank has been in use at the site for additional propane supply and this tank will be removed as part of the Conditional Use Permit approval. The site is accessed via Oceanside Boulevard through an existing shared 50-foot wide access driveway. The driveway is shared with the Evergreen Nursery property located directly to the west.

The subject site exists with a grade differential of approximately 20 feet from Oceanside Boulevard to the southern property line. The location of the two new propane tanks within the site is relatively flat and the combination of the lower elevation and native vegetation around the site provides effective screening for the proposed tanks. The project site has an underlying General Plan land use designation of General Industrial (GI) and a Zoning designation of General Industrial (IG). The site is surrounded by the Evergreen Nursery to the west and south, the Orco Block business to the east and north, and the Sprinter rail line to the south. The surrounding land uses in the area consist of General Industrial (GI) properties to the east and west, Limited Industrial (IL) to the south, and the El Corazon Planned Unit Development (PD-1) to the north.

Project Description: The project application is comprised of the following required entitlement:

<u>Conditional Use Permit (CUP14-00010)</u> represents a request for the following:

A Conditional Use Permit to allow the installation and use of two 30,000-gallon above ground and outdoor propane storage tanks. Pursuant to Zoning Ordinance Section 3026 (Hazardous Material Storage), the handling and use of hazardous materials in quantities with capacity greater than 500 gallons is subject to review and approval of a Conditional Use Permit. The two 30,000-gallon propane storage tanks would be considered hazardous material storage; therefore a Conditional Use Permit is required.

The measurement of the proposed tanks is approximately 60 feet in width and 9.6 feet in diameter. The tanks would be placed on skids with at least a 10-foot separation between tanks and a 50-foot setback from property lines. A 30-foot buffer from any vegetation area is required, as per the Oceanside Fire Department requirements; which is met with the established 50-foot rear setback. The two new tanks would have a maximum height of 10.5 feet and would be situated at the south west corner of the site.

Both tanks would be screened from public view by the existing vegetation around the property. The proposal for two 30,000-gallon above ground propane storage tanks would allow the Premier Patio Heating Specialist business to minimize any variations in supply, and continue to provide propane services to customers.

All hazardous materials will be stored and handled in accordance with the City of Oceanside Fire Department requirements and the County Department of Environmental Health regulations.

The project is subject to the following Ordinances and City policies:

1. General Plan
2. Zoning Ordinance
3. Land Use Compatibility
4. California Environmental Quality Act (CEQA)

ANALYSIS

KEY PLANNING ISSUES

1. General Plan Conformance

The General Plan Land Use Map designation on the subject property is General Industrial (GI). The proposed project is consistent with this designation and the goals and objectives of the City's General Plan as follows:

A. Land Use Element

Goal 1.11 Balanced Land Use

Objective: To develop and use lands for the long-term provision of a balanced, self-sufficient, and efficient community.

Policy A: The City shall establish and enforce a balanced distribution of land uses to organize the City in a hierarchy of activity centers and land uses so as to foster a sense of neighborhood, community, and regional identity.

Policy B: The City shall analyze proposed land uses for assurance that the land use will contribute to the proper balance of land uses within the community or provide a significant benefit to the community.

The proposal for two 30,000-gallon above ground propane tanks would be located within an existing propane distribution and rental facility. The improvements to the site would be minimal and will not change the function of the approved facility. The added tanks would provide additional storage capacity for propane used at this existing business, and the tanks would be safely located behind a fenced and gated area toward the rear of the facility.

The additional propane storage tanks would be consistent within the General Industrial designation of the site that supports the City's economic future and employment opportunities by providing land uses that create benefits to the community and maintaining a balanced land use distribution.

Policy C: The City shall continuously monitor the impact and intensity of the land use and land use distribution to ensure that the City's circulation system is not overburdened beyond design capacity.

This project is within an existing propane facility, which is located along a major regional transportation corridor known as Oceanside Boulevard. The additional 30,000-gallon propane tanks would increase propane storage, and will not generate additional trips and traffic as specified in the project description.

The hours-of-operation will not change with the added tanks and the business will maintain the operating hours from (7:00 a.m. to 3:30 p.m.), Monday through Saturday. All business transactions take place via the internet and off-site, where full propane cylinders are delivered and exchanged for empty cylinders. The only traffic to the site would be company trucks and employees. Since the proposed tanks would not alter the existing business operations and the use would function in the same manner, the traffic generated by the new tanks would not increase the vehicle trips and not lower the level of service for the existing and surrounding roadways. In addition, staff reviewed the plans for the new tanks to ensure that the internal circulation is adequate and would function with the proper ingress and egress. The design and location of the tanks accommodates ample distance for the facility's service trucks to maneuver to and from the tanks without jeopardizing vehicle circulation on site.

2. Zoning Ordinance Compliance

This project is located in the General Industrial District (IG). The development will meet all the provisions of the Zoning Ordinance in parking requirements, setbacks and all development regulations.

The following table summarizes proposed and applicable development standards for the Industrial Districts and the project site:

	ZONING REQUIREMENTS	EXISTING AND PROPOSED
MINIMUM LOT SIZE	40,000 square feet	Approximately 139,392 square feet (existing)
OFF-STREET PARKING	1 space per 1,000 sq. (6,250 sq. ft./1,000) = 7 stalls	7 stalls (existing)
FRONT YARD	10-feet	50-feet + (existing)
SIDE YARD	0-feet	50-feet + (existing)
REAR YARD	0-feet	50-feet + (proposed tanks)
HEIGHT	80-feet	10.5-feet (proposed tanks)

The project meets the applicable requirements of the zoning ordinance and is compatible with existing and potential industrial uses in the neighborhood. The new tanks and the existing facility would meet the established setback requirements as specified within the Zoning Ordinance and the Fire Code, as well as the requirements for the site's conservation easement established in 1998 under the Evergreen Nursery Development Plan (D-9-98) and Conditional Use Permit (C-11-98). As part of that earlier action, habitat restoration was implemented along Loma Alta Creek, with a conservation easement recorded on property immediately south of the subject property boundary. An associated no-build easement of 50 feet was placed on the subject property, extending parallel and inward to the south/rear property line. This easement was established to provide an adequate buffer for future uses from the established habitat conservation zone located to the south. The proposed tanks would be located at least 50 feet from the rear property line, and thus outside the no-build easement. In addition, the existing propane facility is surrounded by other developed industrial storage businesses in all directions, with the exception of the vacant properties to the south. Therefore, the proposed propane tanks would continue to provide the adequate storage for the existing facility, while establishing compliance with the existing development standards and the established conservation easement.

3. Land Use Compatibility with surrounding developments

The table below describes the property and the surrounding land uses:

LOCATION	GENERAL PLAN	ZONING	LAND USE
Subject Property:	General Industrial (GI)	General Industrial (IG)	Premier Propane Heating Specialist
North of Subject Property (& North of Oceanside Blvd)	*El Corazon Specific Plan (PD-1)*	*El Corazon Specific Plan (PD-1)*	Vacant (Future El Corazon - Parkland and Commercial)
East and North of Subject Property(South of Oceanside Blvd):	General Industrial (GI)	General Industrial (IG)	Orco Block
South of Subject Property:	Light Industrial (LI)	Limited Industrial (IL)	Sprinter Rail, Loma Alta Creek, Evergreen Nursery and vacant lands
West of Subject Property:	General Industrial (GI)	General Industrial (IG)	Evergreen Nursery

The proposed 30,000-gallon aboveground propane storage tanks are considered to be compatible with the surrounding existing uses and their respective General Plan and Zoning Ordinance designations. The storage tanks and the operations would not add additional impacts to the area, as described in the discussion section of this report.

ANALYSIS AND DISCUSSION

Staff's review of the project proposal focused on two items: land use compatibility and screening the facility.

The General Plan designation for the project site is General Industrial. As per Section 2.11 of the Land Use Element, General Industrial areas shall accommodate a wide range of industrial uses, including those of relatively high intensity, while minimizing negative impacts to the surrounding area.

The proposal for the installation and use of the two 30,000-gallon propane storage tanks would be consistent with the provisions and polices for the General Industrial land use district, because they support the existing service business at the project site, and the storage and distribution of materials used by the business would be adequately screened

from public view, as specified in Section 2.11 General Industrial Policies of the City of Oceanside's General Plan. While the existing propane patio heater rental facility is permitted by right within the General Industrial district, the proposed 30,000-gallon propane tanks requires the approval of a Conditional Use Permit. The Conditional Use Permit is required because the proposed project exceeds the 500-gallon thresholds.

The proposed outdoor storage of the two 30,000-gallon propane tanks would be entirely contained on-site and properly screened from the public right-of-way by the existing natural vegetation. The site is uniquely configured and separated from the frontage of Oceanside Boulevard by another industrial property known as Orco Block. In addition, the site is located at a considerably lower elevation than Oceanside Boulevard; therefore the site and the proposed propane tanks would meet the objectives of the General Plan for adequate screening of the facility and the operations.

The proposed propane tanks would be located approximately 1,200 feet away from any residential district and the operations would be in compliance with Building and Fire codes. The facility would be in compliance with the County of San Diego, State of California, and the Federal Government regulations regarding the handling and storage of propane. In addition, all employees would be trained in the proper handling and maintenance procedures for hazardous waste, and all employees will be required to complete the OSHA (Occupational Safety and Health Administration) and DOT (Department of Transportation) safety certification training programs. Therefore, the location and operations of the two propane tanks would not be detrimental to the public health, safety or welfare of persons residing or working in or adjacent to the neighborhood, and will not be detrimental to properties or improvements in the vicinity.

PUBLIC NOTIFICATION

Legal notice was published in the newspaper and notices were sent to property owners of record within a 300-foot radius of the subject property, individuals and/or organizations requesting notification, the applicant and other interested parties. As of January 20, 2015 no communication regarding the request had been received.

ENVIRONMENTAL DETERMINATION

The proposed project is categorically exempt pursuant to Article 19, Class 32 of Section 15332 In-Fill Development projects of the California Environmental Quality Act.

SUMMARY

The proposed use, handling and storage of hazardous materials, as conditioned, will be in compliance with development regulations, the Zoning Ordinance and applicable land use policies of the General Plan. The use will be consistent and compatible with the

surrounding uses and will support the existing service business. Therefore, staff recommends that the Planning Commission approve the subject Conditional Use Permit for the two 30,000-gallon propane storage tanks. The Planning Commission's action should be:

-- Confirm issuance of an Article 19, Class 32 of Section 15332, In-Fill Development projects and Categorical Exemption.

-- Move to approve Conditional Use Permit (CUP14-00010) and adopt Planning Commission Resolution No. 2014-P34 as attached.

PREPARED BY:

Scott Nightingale
Associate Planner

SUBMITTED BY:

Jeff Hunt
Interim City Planner

JH/SN/fil

Attachments:
1. Site Plans/Floor Plans
2. Site Photos
3. Planning Commission Resolution No. 2014-P34
4. Other Attachments (Application Page, Description and Justification, Legal Description, Notice of Exemption)

APN: 162-050-48

SITE ACREAGE: 3.21 Ac.

BUILDING SQUARE FOOTAGE (EXIST.): 6250 SQ. FT.

SETBACKS:
FRONT: 10'
SIDE: NONE
REAR: NONE

LANDSCAPING: EXISTING TO REMAIN

PARKING EXISTING TO REMAIN

ZONING: O.I. (GENERAL INDUSTRIAL) NO CHANGE

GENERAL PLAN DESIGNATION: G.I. (GENERAL INDUSTRIAL) NO CHANGE

MINIMUM LOT AREA: 40,000 SQ. FT.

FLOOD: PROPOSED IMPROVEMENTS OUTSIDE OF FLOODPLAIN - SEE SHEET 2

SCOPE OF WORK:

ADD TWO (2) NEW 30,000 PROPANE TANKS

CONDITIONAL USE PERMIT FOR PROPANE STORAGE TANKS

NOTE:
THE PROJECT IS LOCATED WITHIN A WATER QUALITY ENVIRONMENTALLY SENSITIVE AREA (WQESA)

CURVE TABLE				
CURVE	DELTA	RADIUS	LENGTH	RADIAL TO B.C.
C1	20°45'17"	34.50	12.50	S75°42'47"W
C2	29°33'57"	34.15	17.62	S46°12'00"W

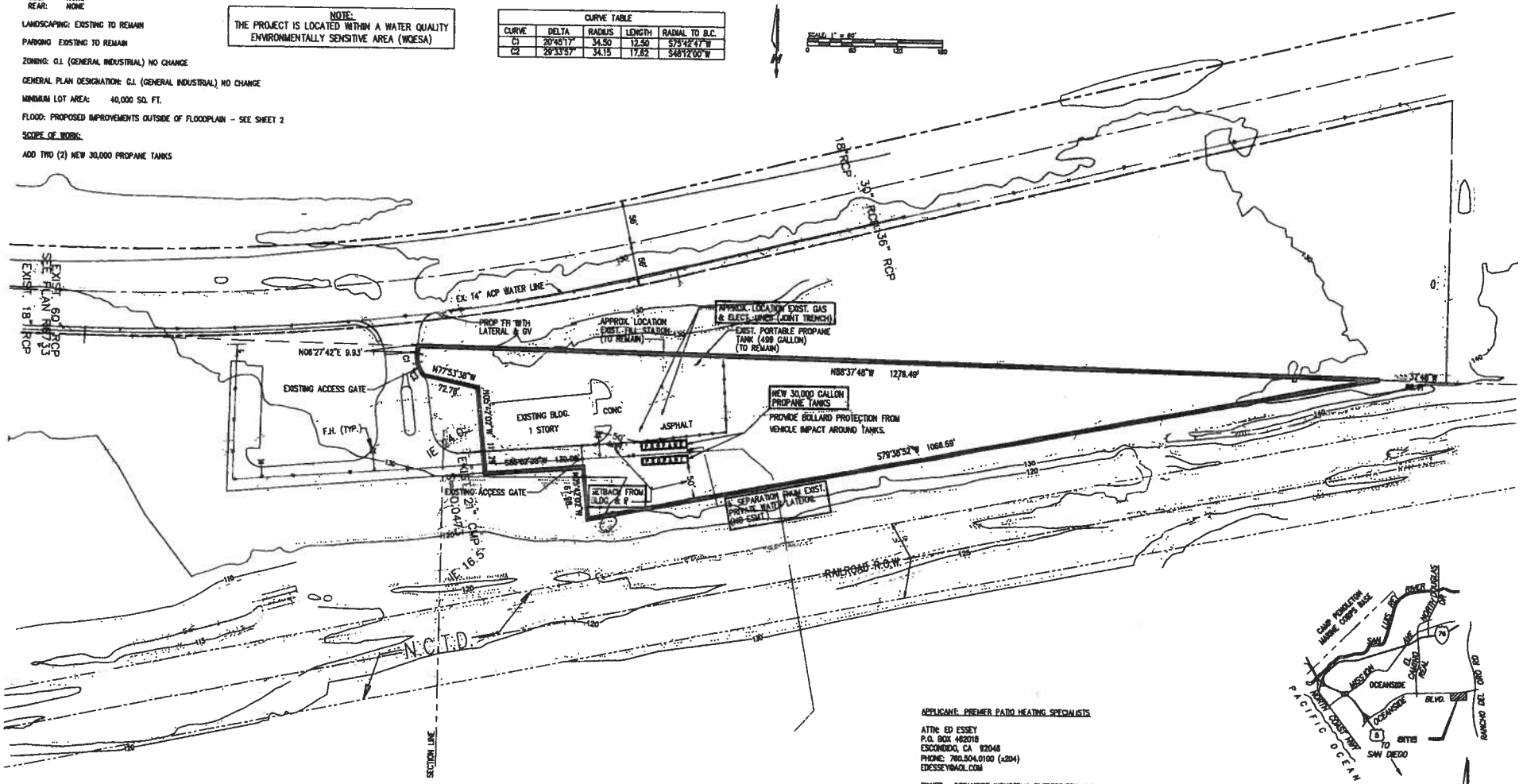

VICINITY MAP
NOT TO SCALE

LEGAL DESCRIPTION:

ALL THAT CERTAIN REAL PROPERTY SITUATED IN THE COUNTY OF SAN DIEGO, STATE OF CALIFORNIA, DESCRIBED AS FOLLOWS:

PARCEL C IN THE CITY OF OCEANSIDE, COUNTY OF SAN DIEGO, STATE OF CALIFORNIA ACCORDING TO THAT CERTAIN CERTIFICATE OF COMPLIANCE FOR LOT LINE ADJUSTMENT NUMBER PLA-13-08 RECORDED OCTOBER 30, 2009 AS INSTRUMENT NO. 2009-0604723 OF OFFICIAL RECORDS.

EXCEPTING ALL SAND, SAND ROCK, SILICA SAND AND QUARTZITE MINERAL RIGHTS LYING UNDER AND WITHIN SAID PROPERTY AS RESERVED IN THAT CERTAIN CORPORATION GRANT DEED DATED JANUARY 23, 1998 BY U.S. SILICA COMPANY TO SKYMONT CORPORATION, RECORDED ON FEBRUARY 9, 1998 IN THE OFFICIAL RECORDS OF SAN DIEGO COUNTY AS INSTRUMENT NO. 1998-0067945 AND AMENDED BY DOCUMENT RECORDED JUNE 18, 1999 AS FILE NO. 1999-430611, BOTH OF OFFICIAL RECORDS.

APPLICANT: PREMIER PATIO HEATING SPECIALISTS

ATTN: ED ESSEY
P.O. BOX 462018
ESCONDIDO, CA 92046
PHONE: 760.504.0100 (x204)
EDESSEY@AOL.COM

OWNER: OCEANSIDE INDUSTRIAL ENTERPRISES, LLC

ATTN: ED ESSEY
P.O. BOX 462018
ESCONDIDO, CA 92046
PHONE: 760.504.0100 (x204)

APPLICANT'S REPRESENTATIVE:

THE LIGHTFOOT PLANNING GROUP
5900 PASTEUR COURT SUITE 110
CARLSBAD, CA 92008
PHONE: 760.692.1924
ANN@LIGHTFOOTPG.COM
JON@LIGHTFOOTPG.COM

TAIT CONSULTING, INC.
818 Crestview Court
San Marcos CA 92078
Phone: 760-433-1186

No. 32247
Exp. 12/31/14

SHEET 1	2 SHEETS

CONDITIONAL USE PERMIT

RECEIVED
SEP 03 2014
CITY OF OCEANSIDE
DEVELOPMENT SERVICES

CONDITIONAL USE PERMIT FOR PROPANE STORAGE TANKS

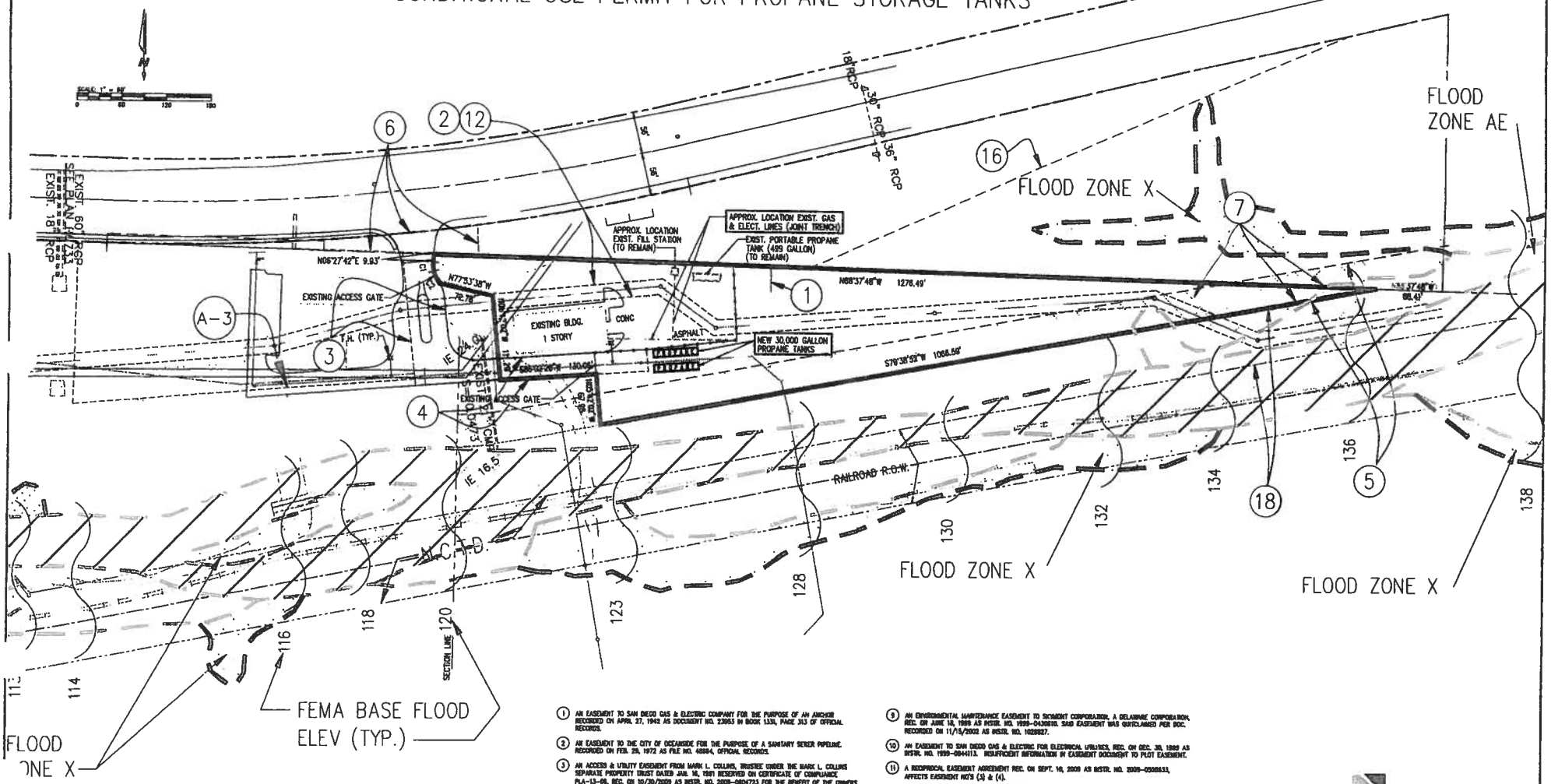

1. AN EASEMENT TO SAN DIEGO GAS & ELECTRIC COMPANY FOR THE PURPOSE OF AN ANCHOR RECORDED ON APRIL 27, 1942 AS DOCUMENT NO. 23053 IN BOOK 1333, PAGE 313 OF OFFICIAL RECORDS.
2. AN EASEMENT TO THE CITY OF OCEANSIDE FOR THE PURPOSE OF A SANITARY SEWER PIPELINE RECORDED ON FEB. 29, 1972 AS FILE NO. 46884, OFFICIAL RECORDS.
3. AN ACCESS & UTILITY EASEMENT FROM MARK L. COLLINS, TRUSTEE UNDER THE MARK L. COLLINS SEPARATE PROPERTY TRUST DATED JAN. 16, 1991 RESERVED ON CERTIFICATE OF COMPLIANCE PLA-13-08, REC. ON 10/30/2009 AS INSTR. NO. 2009-0604723 FOR THE BENEFIT OF THE OWNERS OF PARCELS B&C & THEIR SUCCESSORS IN TITLE.
4. AN ACCESS & UTILITY EASEMENT RESERVED ON CERTIFICATE OF COMPLIANCE PLA-13-08, REC. ON 10/30/2009 AS INSTR. NO. 2009-0604723 FOR THE BENEFIT OF THE OWNERS OF PARCEL A & THEIR SUCCESSORS IN TITLE.
5. AN EASEMENT TO THE CITY OF OCEANSIDE TO RESTRICT THE BUILDING OF STRUCTURES, REC. ON FEB. 8, 2001, AS INSTR. NO. 2001-0074283.
6. AN ACCESS & UTILITY EASEMENT FROM RHVS ENTERPRISES, LP, A CALIFORNIA LIMITED PARTNERSHIP TO MARK L. COLLINS, TRUSTEE UNDER THE MARK L. COLLINS SEPARATE PROPERTY TRUST DATED JAN. 16, 1991, RECORDED ON SEPT. 8TH, 2009 AS DOC. NO. 2009-0500988 TO BENEFIT PARCELS A, B, & C & THEIR SUCCESSORS IN TITLE.
7. A STORAGE EASEMENT FROM MARK L. COLLINS, TRUSTEE UNDER THE MARK L. COLLINS SEPARATE PROPERTY TRUST DATED JAN. 16, 1991 TO RHVS ENTERPRISES, LP, A CALIFORNIA LIMITED PARTNERSHIP RECORDED ON SEPT. 8TH, 2009 AS DOCUMENT NO. 2009-0500989.
8. AN EASEMENT TO SAN DIEGO GAS & ELECTRIC COMPANY FOR ELECTRICAL PURPOSES RECORDED JAN. 11, 1926, IN BOOK 1926-1 PAGE 388. THIS EASEMENT WAS RELOCATED PER PLA-13-08 OF CERTIFICATE OF COMPLIANCE PLA-13-08 REC. ON 10/30/2009 AS INSTR. NO. 2009-0604723.
9. AN ENVIRONMENTAL MAINTENANCE EASEMENT TO SICMONT CORPORATION, A DELAWARE CORPORATION, REC. ON JUNE 18, 1999 AS INSTR. NO. 1999-0438870. SAID EASEMENT WAS QUITCLAIMED PER DOC. RECORDED ON 11/15/2002 AS INSTR. NO. 1029827.
10. AN EASEMENT TO SAN DIEGO GAS & ELECTRIC FOR ELECTRICAL UTILITIES, REC. ON DEC. 30, 1999 AS INSTR. NO. 1999-0844113. INSUFFICIENT INFORMATION IN EASEMENT DOCUMENT TO PLOT EASEMENT.
11. A RECIPROCAL EASEMENT AGREEMENT REC. ON SEPT. 10, 2009 AS INSTR. NO. 2009-0500833, AFFECTS EASEMENT NO'S (3) & (4).
12. AN EASEMENT TO THE CITY OF OCEANSIDE, FOR WIDENING EXISTING SEWER EASEMENT REC. ON OCT. 30, 2009, AS INSTR. NO. 2009-0604721.
13. (NOT USED)
14. (NOT USED)
15. (NOT USED)
16. AN EASEMENT FOR POLES, WIRES AND INCIDENTAL PURPOSES REC. APRIL 23, 1942, IN BOOK 1346, PAGE 52 OF OFFICIAL RECORDS.
17. (NOT USED)
18. AN EASEMENT TO THE ENVIRONMENTAL TRUST, INC., A CALIFORNIA NON-PROFIT PUBLIC BENEFIT CORPORATION FOR THE PURPOSE OF PERPETUAL CONSERVATION EASEMENT. RECORDED ON FEBRUARY 8, 2001 AS FILE NO. 2001-0074288 OF OFFICIAL RECORDS.

TAIT CONSULTING, INC.
#18 Crestview Court
San Marcos, CA 92078
Phone: 760-439-1160

No. 32247
Exp. 12/31/14

SHEET 2 OF 2 SHEETS

CONDITIONAL USE PERMIT

RECEIVED
SEP 03 2014
CITY OF OCEANSIDE
DEVELOPMENT SERVICES

GEORGE P. LOUNSBURY, R.C.E.
733 SO. KALMIA STREET
ESCONDIDO, CA 92025
TEL. 760-741-6681

13 APR 2002

JN 02-401

MR. PROPANE, INC.
P.O. BOX 27837
SAN DIEGO, CA 92198-1837
TEL 858-521-0008

SKID STRUCTURE FOR 30,000 gal PROPANE TANK

GIVEN: TANK = 9.5' ø x 61' LONG
Wt = 56,000 lbs.

LPG - 30,000 Gal = 110,000 lbs

REGISTERED PROFESSIONAL ENGINEER GEORGE P. LOUNSBURY No. 21291 Exp: 9/30/05 CIVIL STATE OF CALIFORNIA

SEISMIC ZONE 4

$C_a = 0.44$, $N_a = 1$, $I = 1.25$

$V = 0.7 C_a I W$ (est. skid = 12000#)

W = Tank + LPG + Skid
= 56K + 110K + 12K
= 178K

$V = 0.7 \times 0.44 \times 1.25 \times 178K = 68.5K$

CHECK OVERTURNING (SKIDS @ 9.5' WIDE, TANK @ 5.75' ABOVE GRADE)

$M_o = 68.5 \times 5.75 = 394$ KFt

$M_r = 178.0 \times 9.5/2 = 845$ KFt

FACTOR OF SAFETY = 845/394 = 2.1 okay

SKID FRAME LOADS

LOAD = $0.9D \pm E_s/1.4$

D = DL = 178000#

$E_s = M_o/L = 394000/9.5 = 41{,}500$#

$= 0.9 \times 178000 \pm 41500/1.4$

$= 160{,}200 \pm 29600$

E to 1/2 Frame only

FRAM "UNIT LOAD"

$= \frac{160{,}200}{[(2 \times 61 + (8 \times 8.17)]} \pm \frac{29600}{93.7} = 855 \pm 316$

= 539 #/LF MIN, 1171 #/LF MAX

MR. PROPANE, INC.

FRAME BENDING

TANK WEAR PADS = 35' O.C.
− 5' (2 × ½ TRIPLE FRAME)
30' FRAME MIDDLE SPAN

$M = \frac{wl^2}{12} = \frac{1171 \times 30^2}{12} =$ 87,825 #'

12 × 8 × 7/16" Rect. TUBE
S = 39.8

$f_b = M/S = \frac{87825 \times 12}{39.8} = 26500 < 22{,}000 \times 1.33$

12 × 8 × 7/16 okay

ENDS – CANTILEVER

13 − 2.5 = 10.5

$M = \frac{wl^2}{2} = \frac{1171 \times 10.5^2}{2} =$ 64500 #' < 87,800

STILL okay

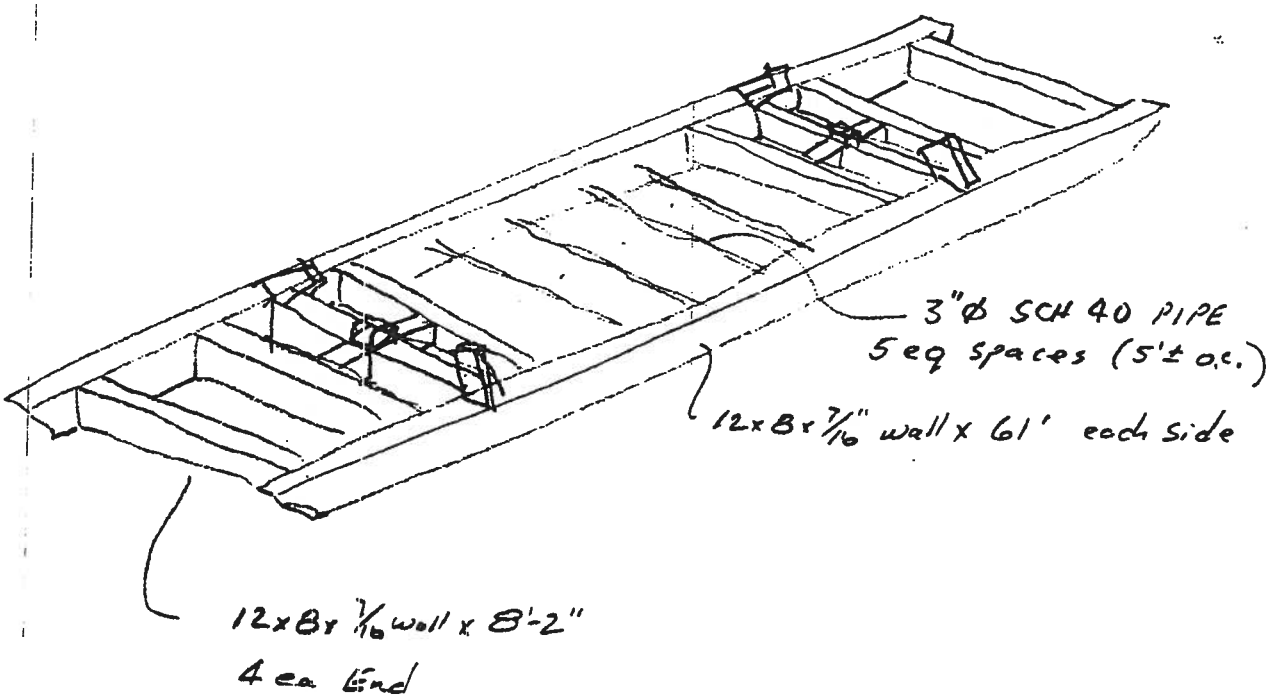

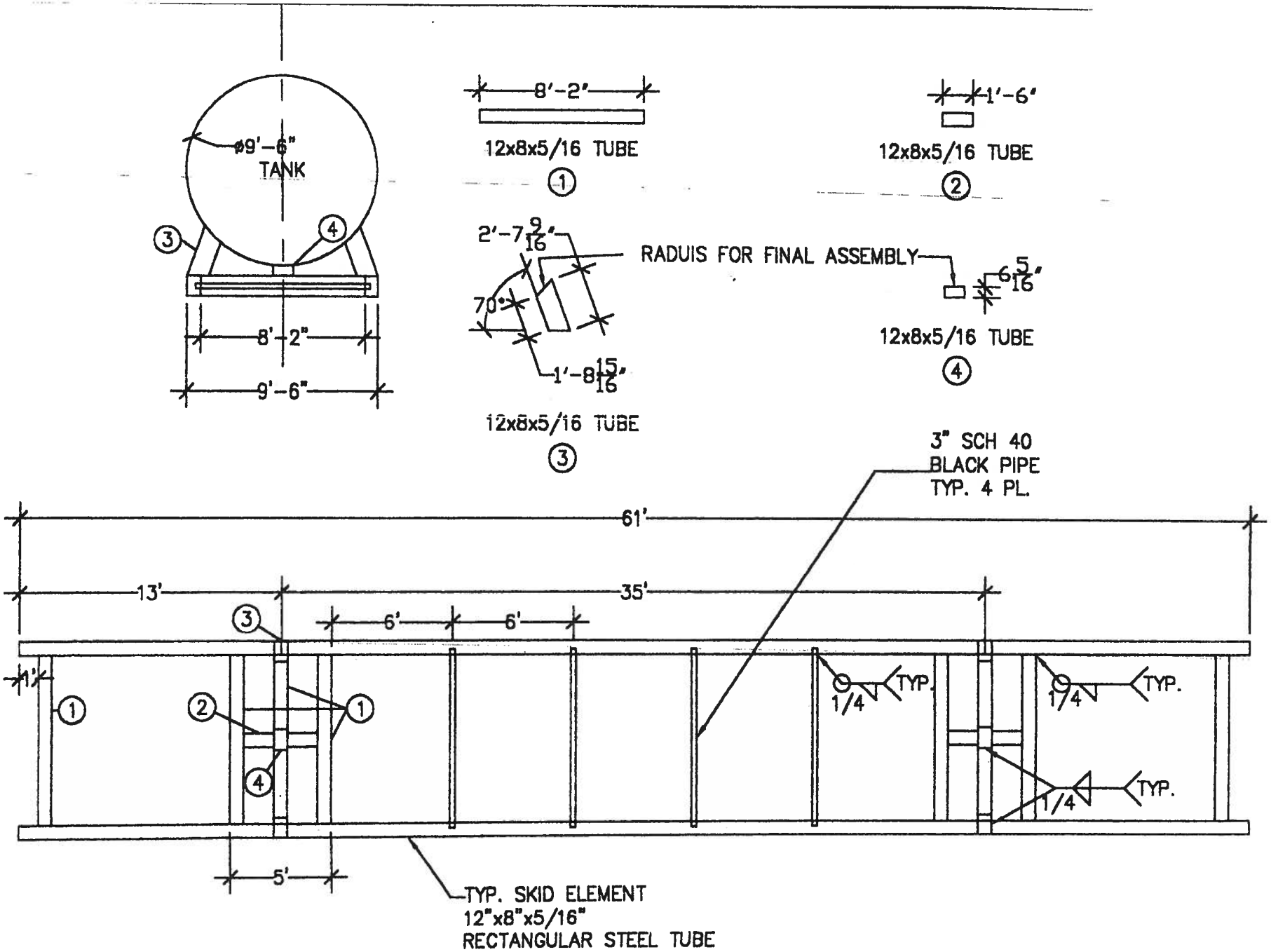
ø9'-6"
TANK
8'-2"
9'-6"
8'-2"
12x8x5/16 TUBE
1
1'-6"
12x8x5/16 TUBE
2
2'-7 9/16"
RADUIS FOR FINAL ASSEMBLY
70°
1'-8 15/16"
12x8x5/16 TUBE
3
6 5/16"
12x8x5/16 TUBE
4
3" SCH 40
BLACK PIPE
TYP. 4 PL.
61'
13'
35'
6'
6'
1'
1/4
TYP.
5'
TYP. SKID ELEMENT
12"x8"x5/16"
RECTANGULAR STEEL TUBE

Site Photo Exhibit

Conditional Use Permit for Propane Storage Tanks

3/10/14

Looking southwest at existing building and parking lot

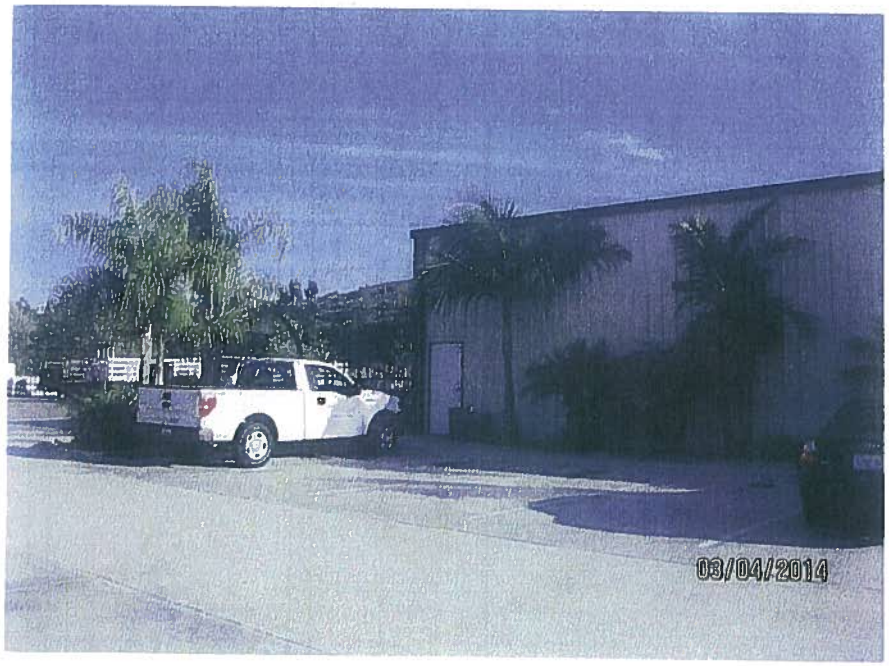

Looking southeast at existing building, landscaping and parking lot

Looking west at entry gate to subject property

Looking east at vacant portion of subject property

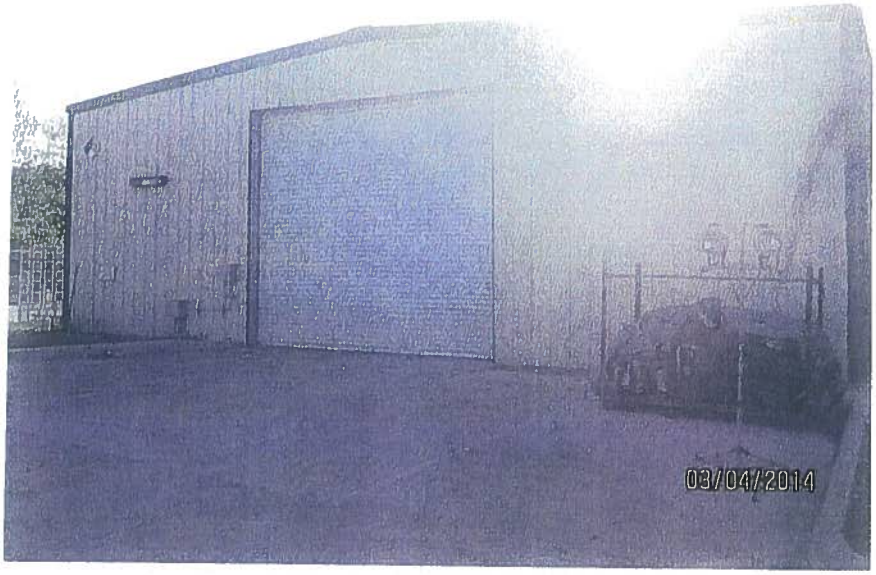

East side of existing building

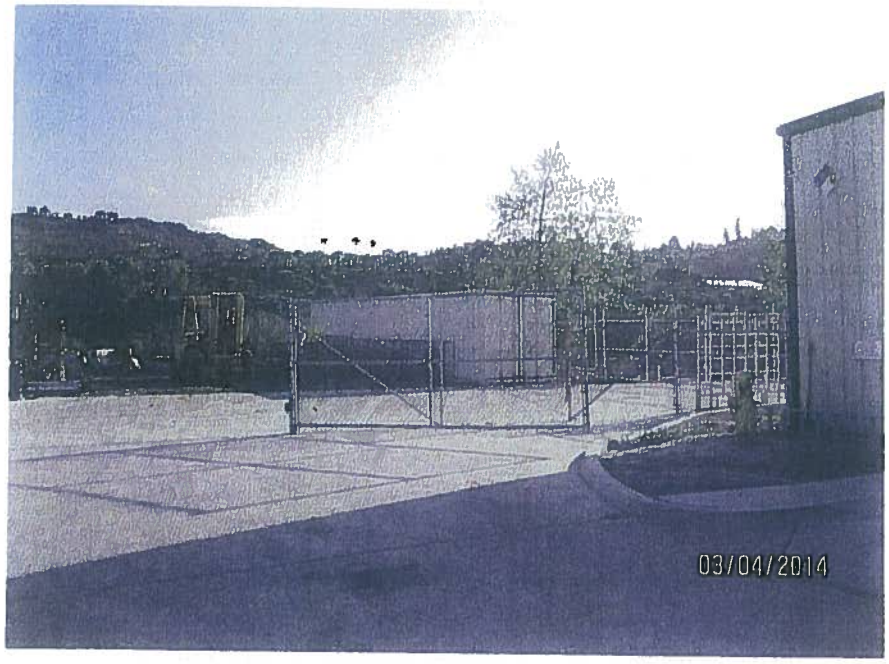

Looking south at southern access gate

Approximate location of new propane tanks (fence, equipment and trucks to be relocated)

Existing Fill Station (to remain) and empty propane cylinders

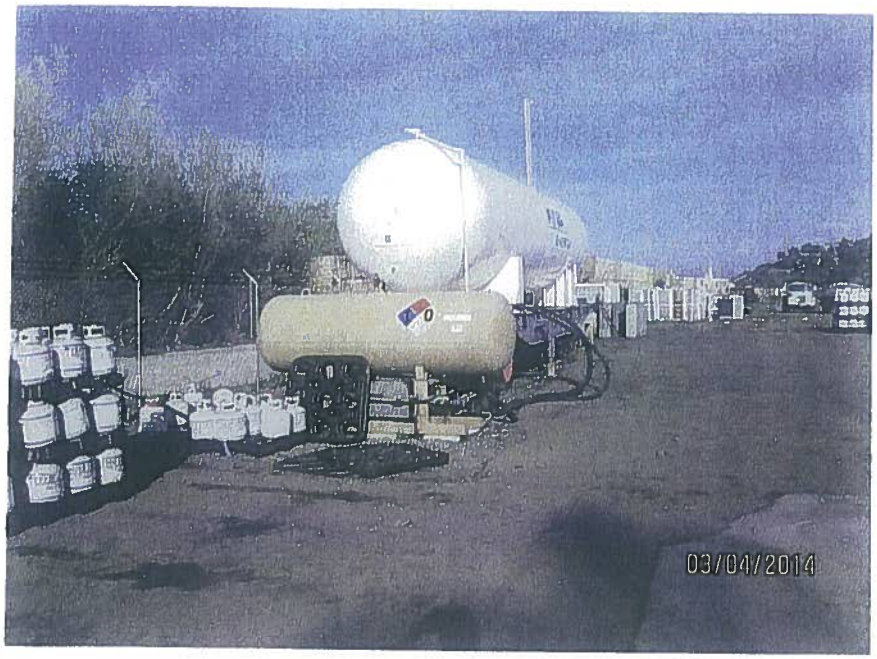

Existing 499 gallon tank (to remain) and mobile 10,000 gallon tank (to be removed)

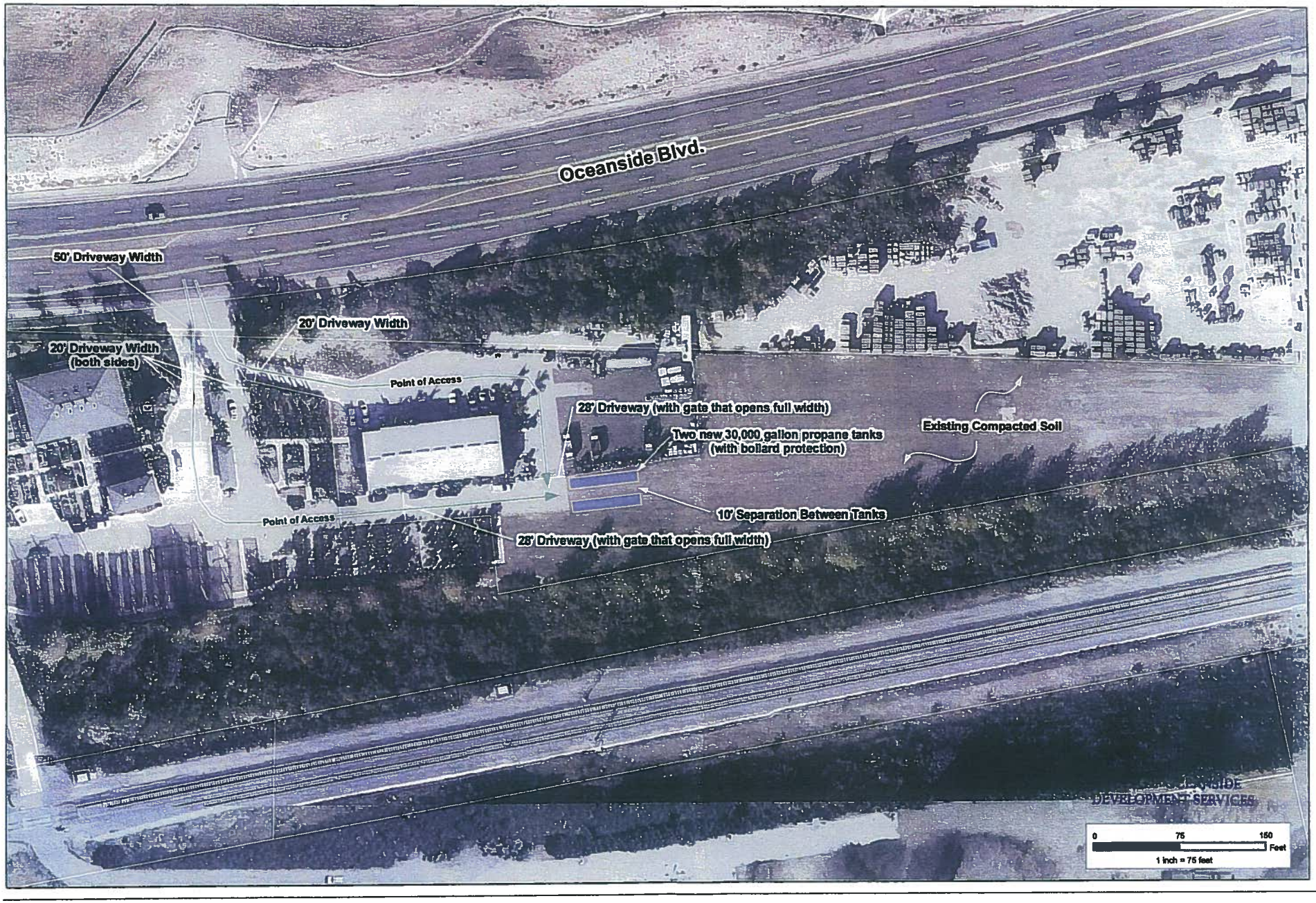

THE LIGHTFOOT PLANNING GROUP

PREMIERE PATIO HEATING SPECIALISTS, LLC
3231-B OCEANSIDE BOULEVARD

N
W
E
S

FIRE DEPARTMENT ACCESS EXHIBIT

Source:
ArcGIS Online Imagery 2012
ESRI GIS 1-13

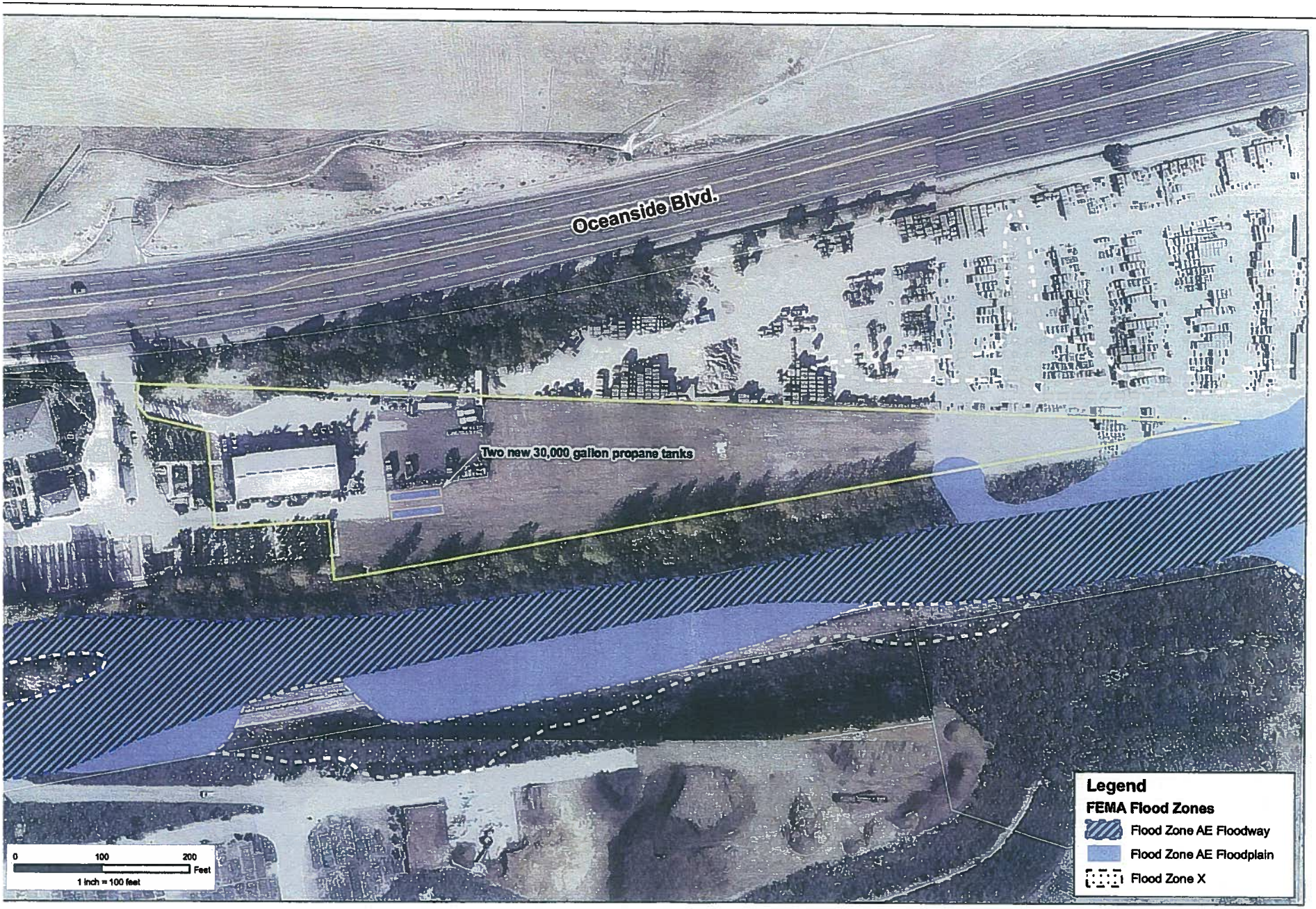

The Lightfoot Planning Group

Premiere Patio Heating Specialists, LLC

N
W
E
S

FEMA Flood Exhibit

Source:
ArcGIS Online Imagery 2012
ArcGIS 1-13

PLANNING COMMISSION
RESOLUTION NO. 2014-P34

A RESOLUTION OF THE PLANNING COMMISSION OF THE CITY OF OCEANSIDE, CALIFORNIA APPROVING A CONDITIONAL USE PERMIT ON CERTAIN REAL PROPERTY IN THE CITY OF OCEANSIDE

APPLICATION NO:	CUP14-00010
APPLICANT:	Premiere Patio Specialists LLC.
LOCATION:	3231 Oceanside Boulevard

THE PLANNING COMMISSION OF THE CITY OF OCEANSIDE, CALIFORNIA DOES RESOLVE AS FOLLOWS:

WHEREAS, there was filed with this Commission a verified petition on the forms prescribed by the Commission requesting a Conditional Use Permit under the provisions of Articles 11 and 41 of the Zoning Ordinance of the City of Oceanside to permit the following:

to permit the installation and use of two 30,000-gallon above ground and outdoor propane storage tanks located at 3231 Oceanside Boulevard;

on certain real property described in the project description.

WHEREAS, the Planning Commission, after giving the required notice, did on the 26th day of January 2014, conduct a duly advertised public hearing as prescribed by law to consider said application.

WHEREAS, pursuant to the California Environmental Quality Act of 1970, and State Guidelines thereto; this project is categorically exempt from CEQA per Article 19, Section 15332, In-fill Development projects;

WHEREAS, pursuant to Oceanside Zoning Ordinance §4603, this resolution becomes effective 10 days from its adoption in the absence of the filing of an appeal or call for review;

WHEREAS, there is hereby imposed on the subject development project certain fees, dedications, reservations and other exactions pursuant to state law and city ordinance;

WHEREAS, pursuant to Gov't Code §66020(d)(1), NOTICE IS HEREBY GIVEN that the project is subject to certain fees, dedications, reservations and other exactions as provided below:

///////

///////

Description	Authority for Imposition	Current Estimate Fee or Calculation Formula
Drainage Fee	Ordinance No. 85-23 Resolution No. 06-R0334-1	Depends on area (range is $2,843-$15,964 per acre)
Public Facility Fee	Ordinance No. 91-09 Resolution No. 06-R0334-1	$0.713 per square foot or $713 per thousand square feet for non-residential uses
School Facilities Mitigation Fee	Ordinance No. 91-34	$.51 per square foot non-residential for Oceanside
Traffic Signal Fee	Ordinance No. 87-19 Resolution No. 06-R0334-1	$15.71 per vehicle trip
Thoroughfare Fee (For commercial and industrial please note the 75 percent discount)	Ordinance No. 83-01 Resolution No. 06-R0334-1	$255 per vehicle trip (based on SANDAG trip generation table available from staff and from SANDAG)
Water System Buy-in Fees	Oceanside City Code §37.56.1 Resolution No. 87-96 Ordinance No. 05-OR 0611-1	Fee based on water meter size. Non-residential is $37,205 for a 2" meter.
Wastewater System Buy-in Fees	Oceanside City Code § 29.11.1 Resolution No. 87-97 Ordinance No. 05-OR 0610-1	Based on capacity or water meter size. Non-residential is $50,501for a 2" meter.
San Diego County Water Authority Capacity Fees	SDCWA Ordinance No. 2005-03	Based on meter size. Non-residential is $23,358 for a 2" meter.

WHEREAS, studies and investigations made by this Commission and in its behalf reveal the following facts:

FINDINGS:

For the Conditional Use Permit for the use, handling, and storage of hazardous materials for an existing propane patio heater rental business:

1. The location of the proposed hazardous material will be stored within two new 30,000-gallon outdoor storage tanks in conjunction and to facilitate an existing propane patio heater rental and distribution business, is in accord with the objectives of the Zoning

Ordinance and the purposes of the underlying General Industrial district. The proposed location of the tanks is in compliance with the development standards and outdoor storage requirements for the General Industrial district, and the existing vegetation around the property would provide the screening required for the outdoor operations.

2. The location for the use and conditions under which it will be operated are consistent with the General Plan, will not be detrimental to public health, safety or welfare of persons residing or working in or adjacent to the neighborhood; and will not be detrimental to properties or improvements in the vicinity or to the general welfare of the City. All hazardous materials will be stored and handled in accordance with the City of Oceanside Fire Department requirements and the County Department of Environmental Health regulations.

3. The proposed conditional use is subject to compliance with Zoning Ordinance provisions, specific conditions of project approval and additional regulations/licensing as deemed necessary by other regulatory or permit authorities. The proposed two 30,000-gallon propane storage tanks would be designed to meet the development regulations established within the Zoning Ordinance for outdoor storage and General Industrial uses. The location of the existing propane facility and the proposed tanks would be set back an adequate distance from property lines and screen from the public right-of-way by the existing and surrounding vegetation around the site, thus complying with the provisions within the General Plan and the Zoning Ordinance.

NOW, THEREFORE, BE IT RESOLVED that the Planning Commission does hereby approve Conditional Use Permit (CUP14-00010) subject to the following conditions:

Building:

1. The granting of approval under this action shall in no way relieve the applicant/project from compliance with all current State and local building codes. Applicable Building Codes and Ordinances shall be based on the date of submittal for Building Division plan check.

2. The building plans for this project shall be prepared by a licensed architect or engineer and shall be in compliance with this requirement prior to submittal for building plan review.

3. Compliance with the Federal Clean Water Act Best Management Practices (BMP's) shall be demonstrated on the plans. Separate/unique addresses may be required to facilitate utility releases. Verification that the addresses have been properly assigned by the City's Planning Division shall accompany the Building Permit application.

4. A complete Soils Report, Structural Calculations, & Energy Calculations/documentation shall be required at time of plans submittal to the Building Division for plan check.

5. The developer shall monitor, supervise and control all building construction and supportive activities so as to prevent these activities from causing a public nuisance, including, but not limited to, strict adherence to the following:

   a) Building construction work hours shall be limited to between 7:00 a.m. and 6:00 p.m. Monday through Friday, and on Saturday from 7:00 a.m. to 6:00 p.m. for work that is not inherently noise-producing. Examples of work not permitted on Saturday are concrete and grout pours, roof nailing and activities of similar noise-producing nature. No work shall be permitted on Sundays and Federal Holidays (New Year's Day, Memorial Day, July 4th, Labor Day, Thanksgiving Day, Christmas Day) except as allowed for emergency work under the provisions of the Oceanside City Code Chapter 38 (Noise Ordinance).

   b) The construction site shall be kept reasonably free of construction debris as specified in Section 13.17 of the Oceanside City Code. Storage of debris in approved solid waste containers shall be considered compliance with this requirement. Small amounts of construction debris may be stored on-site in a neat, safe manner for short periods of time pending disposal.

Engineering:

6. Design and construction of all improvements shall be in accordance with the City of Oceanside Engineers Design and Processing Manual, City Ordinances, and standard engineering and specifications of the City of Oceanside and subject to approval by the City Engineer.

7. Prior to any grading of any part of the project, a comprehensive soils and geologic investigation shall be conducted of the soils, and formations in the project. All necessary measures shall be taken and implemented to assure slope stability, erosion control, and soil

integrity. No grading shall occur until a detailed grading plan, to be prepared in accordance with the Grading Ordinance and Zoning Ordinance is approved by the City Engineer.

8. Prior to the issuance of any grading permit if required, an erosion control plan, designed for all proposed stages of construction, shall be reviewed, secured by the owner/developer with cash securities or letter of credit and approved by the City Engineer.

9. Sediment, silt, grease, trash, debris, and/or pollutants shall be collected on-site and disposed of in accordance with all state and federal requirements, prior to stormwater discharge either off-site or into the City drainage system.

10. The owner/developer shall obtain any necessary permits and clearances from all public agencies having jurisdiction over the project due to its type, size, or location, including but not limited to the U. S. Army Corps of Engineers, California Department of Fish & Game, U. S. Fish and Wildlife Service and/or San Diego Regional Water Quality Control Board (including NPDES), San Diego County Department of Environmental Health (DEH), prior to the issuance of grading permits.

11. Approval of this development project is conditioned upon payment of all applicable impact fees and connection fees in the manner provided in chapter 32B of the Oceanside City Code. All traffic signal fees and contributions, highway thoroughfare fees, park fees, reimbursements, and other applicable charges, fees and deposits shall be paid prior to issuance of any building permits, in accordance with City Ordinances and policies. Approval of this project shall constitute the owner/developer's approval of such payments, and his agreement to pay for any other similar assessments or charges in effect when any increment is submitted for building permit approval, and to join, contribute, and/or participate in such districts.

12. Upon acceptance of any fee waiver or reduction by the owner/developer, the entire project will be subject to prevailing wage requirements as specified by Labor Code section 1720(b) (4). The owner/developer shall agree to execute a form acknowledging the prevailing wage requirements prior to the granting of any fee reductions or waivers.

13. In the event that the conceptual plan does not match the conditions of approval, the resolution of approval shall govern.

/////////

Fire:

14. Existing and proposed fire hydrants must be shown on the site plan. All portions of exterior walls must be within 400 feet of a fire hydrant.

15. Fire Department requirements shall be placed on plans in the notes section.

16. Plans shall be submitted to the Fire Prevention Bureau for plan check review and approval prior to the issuance of building permits and accordance with the Department of Environmental Health regulations for storage tanks.

17. Buildings shall meet Oceanside Fire Department's current codes at the time of building permit application.

18. Applicant shall submit details of emergency training and security procedures and appropriate mitigating actions necessary in the event of fire, leaks or spills.

Planning:

19. This Conditional Use Permit (CUP14-00010) shall expire on January 26, 2017, unless implemented as required by the Zoning Ordinance.

20. This Conditional Use Permit (CUP14-00010) approves the installation, storage, and use of two 30,000-gallon propane outdoor propane storage tanks in association with the existing propane patio heater rental, and distribution business located at 3231 Oceanside Boulevard as depicted on the plans and exhibits presented to the Planning Commission for review and approval. No deviation from these approved plans and exhibits shall occur without the City Planner or Planning Commission approval. Substantial deviations shall require a revision to the Conditional Use Permit, or a new Conditional Use Permit, as determined by the City Planner.

21. The applicant, permittee or any successor-in-interest shall defend, indemnify and hold harmless the City of Oceanside, its agents, officers or employees from any claim, action or proceeding against the City, its agents, officers, or employees to attack, set aside, void or annul an approval of the City, concerning Conditional Use Permit (CUP14-00010). The City will promptly notify the applicant of any such claim, action or proceeding against the City and will cooperate fully in the defense. If the City fails to promptly notify the applicant of any such claim action or proceeding or fails to cooperate fully in the defense, the applicant shall not, thereafter, be responsible to defend, indemnify or hold harmless the City.

22. A covenant or other recordable document approved by the City Attorney shall be prepared by the applicant and recorded prior to the issuance of a business license. The covenant shall provide that the property is subject to this resolution, and shall generally list the conditions of approval.

23. Prior to the issuance of building permits, compliance with the applicable provisions of the City's anti-graffiti (Ordinance No. 93-19/Section 20.25 of the City Code) shall be reviewed and approved by the Development Services Department. These requirements, including the obligation to remove or cover with matching paint all graffiti within 24 hours, shall be noted on the Landscape Plan and shall be recorded in the form of a covenant affecting the subject property.

24. Prior to the transfer of ownership and/or operation of the site the owner shall provide a written copy of the applications, staff report and resolutions for the project to the new owner and/or operator. This notification provision shall run with the life of the project and shall be recorded as a covenant on the property.

25. Failure to meet any conditions of approval for this development shall constitute a violation of the Conditional Use Permit.

26. Unless expressly waived, all current zoning standards and City ordinances and policies in effect at the time building permits are issued are required to be met by this project. The approval of this project constitutes the applicant's agreement with all statements in the Description and Justification and other materials and information submitted with this application, unless specifically waived by an adopted condition of approval.

27. This Conditional Use Permit may be called for review by the Planning Commission if complaints are filed and verified as valid by the Code Enforcement Office concerning the violation of any of the approved conditions or assumptions made by the application.

28. The operations are limited to the refilling of small propane tanks/canisters (including 10 gallons or less, with occasional [i.e., no more than once per month] 25-gallon tank fills), and do not include the refilling of trucks for propane distribution. Filling of fuel tanks on permittee's propane-powered trucks is allowed. Changes in the approved operations may require revision to the Conditional Use Permit and Planning Commission approval."

29. Applicant shall prepare hazardous materials release response plan in accordance with Chapter 6.95 of the California Health and Safety Code.

PASSED AND ADOPTED Resolution No. 2014-P34 on January 26, 2015 by the following vote, to wit:

AYES:

NAYS:

ABSENT:

ABSTAIN:

_____
Robert Neal, Chairperson
Oceanside Planning Commission

ATTEST:

_____
Jeff Hunt, Secretary

I, JEFF HUNT, Secretary of the Oceanside Planning Commission, hereby certify that this is a true and correct copy of Resolution No. 2014-P34.

Dated: January 26, 2015

Applicant accepts and agrees with all conditions of approval and acknowledges impact fees may be required as stated herein:

_____ _____
Applicant/Representative Date

..cation for Discretionary Permit

..pment Services Department / Planning Division
..) 435-3520
..ceanside Civic Center 300 North Coast Highway
Oceanside, California 92054-2885

STAFF USE ONLY	
ACC	BY SN ? DHW
HEARING	
GPA	
MASTER/SP.PLAN	
ZONE CH.	
TENT. MAP	
PAR. MAP	
DEV. PL	
C.U.P. CUP14-0001D	
VARIANCE	
COASTAL	
O.H.P.A.C.	

Please Print Or Type All Information

PART I - APPLICANT INFORMATION

1. APPLICANT **Premiere Patio Heating Specialists, LLC**	2. STATUS **Applicant**
3. ADDRESS **P.O. Box 6470, Oceanside, Ca. 92054**	4. PHONE / FAX / E-mail **(760) 504-0100**
5. APPLICANT'S REPRESENTATIVE (or person to be contacted for information during processing) **The Lightfoot Planning Group attn: Ann Gunter**	
6. ADDRESS **5900 Pasteur Ct. Suite 110** **Carlsbad, CA 92008**	7. PHONE / FAX / E-mail **(760) 692-1924 phone** ann@lightfootpg.com

PART II - PROPERTY DESCRIPTION

8. LOCATION **3231-B Oceanside Boulevard**	9. SIZE **3.2 ac**

10. GENERAL PLAN	11. ZONING	12. LAND USE	13. ASSESSOR'S PARCEL NUMBER
GI (General Industrial)	**IG (General Industrial)**	**propane cylinder rental**	**162-050-48**

14. LATITUDE	15. LONGITUDE
33° 12'4" N	**117° 18" 59" W**

PART III - PROJECT DESCRIPTION

16. GENERAL PROJECT DESCRIPTION

A request for a Conditional Use Permit for the addition of two (2) 30,000 gallon propane tanks to an existing propane cylinder rental business

17. PROPOSED GENERAL PLAN	18. PROPOSED ZONING	19. PROPOSED LAND USE	20. NO. UNITS	21. DENSITY
no change	**no change**	**no change**	**n/a**	**n/a**

22. BUILDING SIZE	23. PARKING SPACES	24. % LANDSCAPE	25. % LOT COVERAGE or FAR
6,250 sq. ft. (existing)	**9 spaces (existing)**	**12% (existing)**	**4.4% (existing)**

PART IV - ATTACHMENTS

X	26. DESCRIPTION/JUSTIFICATION	X	27. LEGAL DESCRIPTION	X	28. TITLE REPORT
X	29. NOTIFICATION MAP & LABELS	X	30. ENVIRONMENTAL INFO FORM	X	31. PLOT PLANS
N/A	32. FLOOR PLANS AND ELEVATIONS		33. CERTIFICATION OF POSTING	X	34. OTHER (See attachment for required reports)

PART V - SIGNATURES

SIGNATURES FROM ALL OWNERS OF THE SUBJECT PROPERTY ARE NECESSARY BEFORE THE APPLICATION CAN BE ACCEPTED. IN THE CASE OF PARTNERSHIPS OR CORPORATIONS, THE GENERAL PARTNER OR CORPORATION OFFICER SO AUTHORIZED MAY SIGN. (ATTACH ADDITIONAL PAGES AS NECESSARY).

35. APPLICANT OR REPRESENTATIVE (Print):	36. DATE	37. OWNER (Print)	38. DATE
EDWARD P. ESSEY Ed Essey (Premiere Patio Heating Specialists, LLC)	3-19-14	EDWARD P. ESSEY Ed Essey (Oceanside Industrial Enterprises, LLC)	3-19-14
Sign: Managing Member		Sign: Managing Member	

- **I DECLARE UNDER PENALTY OF PERJURY THAT THE ABOVE INFORMATION IS TRUE AND CORRECT. FURTHER, I UNDERSTAND THAT SUBMITTING FALSE STATEMENTS OR INFORMATION IN THIS APPLICATION MAY CONSTITUTE FRAUD, PUNISHABLE IN CIVIL AND CRIMINAL PROCEEDINGS.**
- **I HAVE READ AND AGREE TO ABIDE BY THE CITY OF OCEANSIDE DEVELOPMENT SERVICES DEPARTMENT AND ECONOMIC COMMUNITY**

Premiere Patio Heating Specialists, LLC

Conditional Use Permit

Description & Justification

August 2014

Introduction

This is a request for a Conditional Use Permit for two 30,000 gallon propane tanks for an established propane cylinder rental business. These tanks would be in addition to an existing 499 gallon tank. Premiere Patio Heating Specialists, LLC has been in business at the current location since 2009. The business specializes in renting propane heaters, and propane cylinder exchange primarily for restaurants. It is located at 3231-B Oceanside Boulevard, east of El Camino Real and west of Rancho Del Oro Drive. Oceanside Boulevard provides access to the site, through a shared access drive with the adjacent property (Evergreen Nursery).

The subject property is 3.21 acres in size with an Assessor's Parcel Number of 162-050-48. The property has a General Plan land use designation of General Industrial (GI) and a corresponding zone of General Industrial (IG). The Evergreen Nursery business lies to the west and south; the Orco Block business to the east and north, the Sprinter rail line runs approximately 75 ft. to the south, within the Loma Alta Creek corridor.

Current Land Use

The property is developed, with a 6,250 sq. ft. building which houses offices, storage and maintenance areas for propane heaters. Required parking is provided on the north side of the building, pavement and landscaping are in good repair, and the property is generally in good condition. A paved yard to the east of the building is where the current propane tank, additional empty cylinders and trucks used for delivery are stored. The remaining portion of the parcel is currently vacant, level and free of flammable material. The entire site has been previously graded and used for nursery product storage, and historically was part of the silica sand mining operations.

A gate into the subject property from the shared driveway meets Fire Department requirements for access. A second gate south of the building provides a second point of access. The existing 499-gallon propane tank has an associated fill station where smaller tanks are filled for delivery to customers. A 10,000 gallon temporary/mobile tank is also on the site for additional supply. This portable tank, on wheels, is regulated by the Department of Transportation. This tank will be removed when the two larger 30,000 gallon tanks are placed on the site.

The 499-gallon tank and fill station will remain in their current locations; the two 30,000 gallon tanks will be located south of the fill station. Gas and electrical lines are already in place to connect the two new tanks to the existing 499 gallon tank and to the fill station. The new tanks will be placed on skids with at least a 10' separation between tanks, a 50' setback from property lines and a 30' buffer from any vegetation. All of these setbacks are required by the Fire Code. Except for decorative landscaping near the parking area, there is no other vegetation or flammable material at the site.

Conditional Use Permit

The General Industrial zoning provides for a full range of industrial uses, and under performance standards, requires a Conditional Use Permit for the proposed above-ground propane storage tanks. A CUP is required per Section 3026 (F), which states:

> "Above-Ground Storage Tanks. Aboveground storage tanks (500 gallons or less) for any flammable liquids shall be allowed with the approval of the Fire Chief. A use permit shall be required for above-ground storage tanks over 500 gallons in size, with the exception that farming operations and remote construction sites shall be exempt from the use permit requirement, but must, in all cases, obtain approval of the Fire Chief."

The business is requesting a Conditional Use Permit to locate two new 30,000 gallon propane tanks on-site. The additional tanks will allow the business to minimize any variations in supply and continue to provide service should there be any interruptions.

Operations

Premiere Patio Heating Specialists, LLC business hours are 7:00 a.m. to 3:30 p.m., six days per week. The business has 12 employees. All business transactions take place off-site, where full propane cylinders are delivered and exchanged for empty cylinders. The only traffic to the site are company trucks; customers do not frequent the business. The additional tanks will increase propane storage capacity and not generate any additional trips or traffic. Parking requirements for the use would be 7 spaces (6,250 sq. ft. General Industrial/1,000 = 7 spaces) and 9 spaces are provided; therefore, parking requirements for the use have been met.

Due to the topography of the site, the area where the propane tanks will be located is at a lower elevation (~20 ft.) than the adjacent Oceanside Boulevard. There is also some native vegetation north of the site, along with some planted screening shrubs, that provides natural screening from Oceanside Boulevard. The combination of the lower elevation and the native vegetation provides effective screening for the proposed propane tanks.

The owner has provided documentation currently on file with San Diego County for the handling and storage of propane. This includes an application for a facility permit, an emergency response plan, a safety data sheet for propane and evidence of safety training. All employees are also required to complete OSHA and DOT safety certificate training. The owner maintains compliance with County of San Diego, State of California and Federal Government regulations regarding the storage and handling of propane.

As part of the site operations, propane tanks are stored in outdoor areas. The Zoning Ordinance permits outdoor storage in commercial and industrial zones, subject to meeting specific standards, and requires an Alternate Outdoor Storage Permit if any of those standards cannot be met. For this project, an Alternate Outdoor Storage Permit is required to address the storage of propane (classified as a hazardous material) and screening of the property. All other standards are met as indicated in the table below:

Standard	Proposed Project	Complies?
a) Storage area shall be less than 35% of site	Outdoor propane storage area approximately 0.5 acre = 16% of site	Yes
b) Meet screening requirements of Section 3020(D)	Existing vegetation on adjacent property and in natural drainage course, combined with elevation differential from Oceanside Blvd. provides screening of the outdoor storage area.	No - Alternate screening provision requested
c) Storage area shall be located to the side or rear of the main building on the site.	Located to side of main building.	Yes
d) No storage in required parking, driveways, fire lanes, setbacks, landscape areas or walkways	Storage area is not in required parking, driveways, fire lanes, setbacks, landscape areas or walkways	Yes
e) Storage area shall not directly abut a residential district	Storage area is within industrial district that does not directly abut a residential district	Yes
f) Storage area limited to materials, products or equipment used, produced, sold or manufactured on the site of a legally conforming business	The propane tanks and equipment are an integral part of the business operations.	Yes
g) Storage area does not remove native plant habitat and is in compliance with all local, state and federal environmental protection laws.	There is no native plant habitat in the outdoor storage area.	Yes
h) Storage area shall meet all RWQCB and NPDES requirements	Existing paved area will be used for outdoor storage. No change in drainage patterns or new paving is proposed.	Yes
i) No hazardous materials stored within the storage area.	Propane is to be stored in the outdoor areas.	No – Alternate Outdoor Storage Permit requested
j) Visual buffering shall comply with screening requirements of Section 3020(D).	Existing vegetation on adjacent property and in natural drainage course, combined with elevation differential from Oceanside Blvd. provides screening of the outdoor storage area.	No – Alternate screening provision requested
k) Storage area and materials are maintained in a clean and orderly manner	Business operations provide for orderly placement of propane tanks and equipment	Yes

Required Findings – Conditional Use Permit

The City of Oceanside Zoning Ordinance stipulates that three specific findings must be made before a Conditional Use Permit can be approved. This proposal meets them as follows:

1. **That the proposed location of the use is in accord with the objectives of the Zoning Ordinance and the purposes of the district in which the site is located.**

   The purpose of the IG (General Industrial) zone in which the site is located, is to provide for the full range of manufacturing, industrial processing, general service and distribution uses deemed suitable for location in Oceanside. The rental of propane cylinders is listed as a permitted use. The location of the additional tanks within the existing facility is consistent and in compliance with the Zoning Ordinance and General Industrial zone and will facilitate operations for this existing business.

2. **That the proposed location of the conditional use and the proposed conditions under which it would be operated or maintained will be consistent with the General Plan; will not be detrimental to the public health, safety or welfare of persons residing or working in or adjacent to the neighborhood of such use; and will not be detrimental to properties or improvements in the vicinity or to the general welfare of the City.**

   The installation of the additional propane tanks in conjunction with the permitted industrial use will be compatible with and will not have a negative impact on the surrounding industrial uses. All work will be done in accordance with the Building Code and Fire Code so as not to have an effect on surrounding properties. Additionally, all personnel performing the work will have the proper documented training.

3. **That the proposed conditional use will comply with the provisions of the Zoning Ordinance, including any specific condition required for the proposed conditional use in the district which it would be located.**

   The installation of the additional propane tanks is a modification to an existing site. The larger tanks require a Conditional Use Permit in the General Industrial zone. There are no specific conditions required by the Zoning Ordinance provisions in the General Industrial district for this proposed site modification.

Required Findings – Alternative Outdoor Storage Permit

The City of Oceanside Zoning Ordinance stipulates that five specific findings must be made before an Alternative Outdoor Storage Permit can be approved. This proposal meets them as follows:

I. **The proposed use is in accord with the objectives of the ordinance and the purposes of the district where the site is located.**

   The use is located in the IG (General Industrial) zone, which permits sales, service and rental of industrial equipment. The business engages in the rental of propane cylinders to other business entities. Therefore, the use is in accord with the zone district in which it is located. Outdoor facilities provisions of the Zoning Ordinance provide the means for aesthetic outdoor storage. By locating the proposed large propane tanks and smaller existing propane cylinders as shown on the provided Site Plan, the grade difference between the site and adjacent Oceanside Boulevard and the presence of natural vegetation provide effective screening, and the objective of the ordinance is met.

II. **The proposed use is reasonably necessary to the operation of the business at the site.**

The use of outdoor storage for the business is necessary since daily operations require the filling and exchange of propane cylinders. The two large proposed tanks as well as the existing smaller propane cylinders are best located in an outside area for both safety purposes and efficient business operations.

III. All environmental impacts can be mitigated in accordance with the California Environmental Quality Act.

No environmental impacts will result from the proposed project or outdoor storage.

IV. The proposed use will not be detrimental to the public health, safety or welfare or persons residing or working in or adjacent to the neighborhood of such use and will not be detrimental to properties or improvements in the vicinity or to the general welfare of the City.

The proposed outdoor storage will be entirely contained on the site and properly screened by existing natural vegetation from the public right-of-way. Further, all Federal, State and Local regulations for the handling and storage of propane will be observed at all times.

V. The proposed alternative is tasteful and assists in creating a quality public environment.

The proposed outdoor storage and work area around the propane tanks are an integral part of the business operations, located within an established industrial area. The site is uniquely configured as it is separated from the Oceanside Boulevard frontage by another industrial property, which has tall, existing vegetation within a drainage channel, between the storage area and the public right-of-way. In addition, the site is located at a grade considerably lower than Oceanside Boulevard. These existing conditions combine to provide effective screening of most of the property, including all of the outdoor storage areas, from the public right-of-way. These conditions create a quality public environment where the business can operate as needed, yet the objectives of this ordinance are still met.

LEGAL DESCRIPTION

ALL THAT CERTAIN REAL PROPERTY SITUATED IN THE COUNTY OF SAN DIEGO, STATE OF CALIFORNIA, DESCRIBED AS FOLLOW:

PARCEL A:

PARCEL C AS DISCLOSED BY THAT CERTAIN CERTIFICATE OF COMPLIANCE FOR LOT LINE ADJUSTMENT NUMBER PLA-13-06 RECORDED OCTOBER 30, 2009 AS INSTRUMENT NO. 2009-0604723 OF OFFICIAL RECORDS.

EXCEPTING ALL SAND, SAND ROCK, SILICA SAND AND QUARTZITE MINERAL RIGHTS LYING UNDER AND WITHIN SAID PROPERTY AS RESERVED IN THAT CERTAIN CORPORATION GRANT DEED DATED JANUARY 23, 1996 BY U.S. SILICA COMPANY TO SKYMONT CORPORATION, RECORDED ON FEBRUARY 9, 1996 IN THE OFFICIAL RECORDS OF SAN DIEGO COUNTY AS INSTRUMENT NO. 1996-0067645 AND AMENDED BY DOCUMENT RECORDED JUNE 18, 1999 AS FILE NO. 1999-430611, BOTH OF OFFICIAL RECORDS.

PARCEL B:

AN ACCESS AND UTILITY EASEMENT AS SET FORTH IN THAT CERTAIN GRANT OF EASEMENT RECORDED ON SEPTEMBER 08, 2009 AS INSTRUMENT NO. 2009-0501966 OF OFFICIAL RECORDS, MORE PARTICULARLY DESCRIBED AS FOLLOWS:

ALL THAT CERTAIN REAL PROPERTY SITUATED IN THE COUNTY OF SAN DIEGO, STATE OF CALIFORNIA, DESCRIBED AS FOLLOWS:

THAT PORTION OF THE SOUTH HALF OF SOUTHEAST QUARTER OF SECTION 20, TOWNSHIP 11 SOUTH, RANGE 4 WEST, SAN BERNARDINO MERIDIAN, IN THE CITY OF OCEANSIDE, COUNTY OF SAN DIEGO, STATE OF CALIFORNIA, ACCORDING TO THE OFFICIAL PLAT THEREOF, MORE PARTICULARLY DESCRIBED AS FOLLOWS:

BEGINNING AT THE NORTHWESTERLY CORNER OF SAID SOUTH HALF; THENCE, S 89° 08′ 41" E, 890.00 FEET ALONG THE NORTHERLY LINE OF SAID SOUTH HALF AND ALONG THE SOUTHERLY RIGHT OF WAY LINE OF OCEANSIDE BOULEVARD TO THE TRUE POINT OF BEGINNING, AT THE BEGINNING OF A 3052 FOOT RADIUS CURVE, CONCAVE NORTHERLY; THENCE LEAVING SAID NORTHERLY LINE OF SAID SOUTH HALF AND CONTINUING ALONG SAID SOUTHERLY RIGHT OF WAY LINE, ALONG THE ARC OF SAID CURVE, THROUGH A CENTRAL ANGLE OF 8° 39′ 19", A DISTANCE OF 461.04 FEET; THENCE LEAVING SAID RIGHT OF WAY LINE, SOUTH 1° 53′ 16" EAST, 38.83 FEET TO THE SAID NORTHERLY LINE OF SAID SOUTH HALF; THENCE ALONG SAID NORTHERLY LINE, NORTH 88° 37′ 48" WEST, 461.19 FEET TO THE TRUE POINT OF BEGINNING.

PARCEL C:

AN EASEMENT FOR INGRESS AND EGRESS MORE PARTICULARLY DESCRIBED AS FOLLOWS:
THAT PORTION OF THE SOUTH HALF OF SOUTHEAST QUARTER OF SECTION 20, TOWNSHIP 11 SOUTH, RANGE 4 WEST, SAN BERNARDINO MERIDIAN, IN THE CITY OF OCEANSIDE, COUNTY OF SAN DIEGO, STATE OF CALIFORNIA, ACCORDING TO THE OFFICIAL PLAT THEREOF, MORE PARTICULARLY DESCRIBED AS FOLLOWS:

BEGINNING AT THE NORTHWESTERLY CORNER OF SAID SOUTH HALF; THENCE ALONG THE NORTHERLY LINE OF SAID SOUTH HALF, S 89° 08′ 41" E, 1276.81 FEET TO THE TRUE POINT

OF BEGINNING; THENCE, CONTINUING ALONG SAID NORTHERLY LINE, S 89° 08′ 41" E, 42.45 FEET; THENCE, LEAVING THE SAID NORTHERLY LINE, S 05° 56′ 49" W, 9.93 FEET TO THE BEGINNING OF A NON-TANGENT, 36.97 FOOT RADIUS CURVE, CONCAVE TO THE EAST, A RADIAL TO THE BEGINNING OF SAID CURVE BEARS S 84° 44′ 45" E; THENCE, SOUTHERLY ALONG THE ARC OF SAID CURVE, THROUGH A CENTRAL ANGLE OF 48° 22′ 58", A DISTANCE OF 31.21 FEET TO THE BEGINNING OF A NON-TANGENT, 35.00 FOOT CURVE, CONCAVE TO THE WEST, A RADIAL TO THE BEGINNING OF SAID CURVE BEARS S 54° 26′ 37" E; THENCE, SOUTHERLY ALONG THE ARC OF SAID CURVE, THROUGH A CENTRAL ANGLE OF 28° 41′ 46", A DISTANCE OF 17.53; THENCE, TANGENT TO SAID CURVE, S 06° 51′ 37" E, 52.05 FEET; TO THE BEGINNING OF A NON-TANGENT, 34.92 FOOT RADIUS CURVE, CONCAVE TO THE NORTHEAST, A RADIAL TO THE BEGINNING OF SAID CURVE BEARS N 81° 40′ 33" E; THENCE SOUTHEASTERLY ALONG THE ARC OF SAID CURVE, THROUGH A CENTRAL ANGLE OF 85° 37′ 38", A DISTANCE OF 52.19 FEET; THENCE, NON-TANGENT TO SAID CURVE, THENCE S 04° 14′ 56" E, 1.00 FEET; THENCE N 85° 27′ 13" E, 30.59 FEET; THENCE S 06° 12′ 55" E, 28.13 FEET; THENCE S 85° 29′ 56" W, 113.94 FEET; THENCE N 06° 51′ 37" W, 173.51 FEET TO TRUE POINT OF BEGINNING.

PARCEL D:

A 10.00 FOOT WIDE EASEMENT FOR WATER LINE PURPOSES SITUATED IN THE CITY OF OCEANSIDE, COUNTY OF SAN DIEGO, STATE OF CALIFORNIA, THE CENTERLINE OF WHICH IS DESCRIBED AS FOLLOWS:

THAT PORTION OF THE SOUTH HALF OF SOUTHEAST QUARTER OF SECTION 20, TOWNSHIP 11 SOUTH, RANGE 4 WEST, SAN BERNARDINO MERIDIAN, IN THE CITY OF OCEANSIDE, COUNTY OF SAN DIEGO, STATE OF CALIFORNIA, ACCORDING TO THE OFFICIAL PLAT THEREOF, MORE PARTICULARLY DESCRIBED AS FOLLOWS:

BEGINNING AT THE NORTHWESTERLY CORNER OF SAID SOUTH HALF; THENCE, S 89° 08′ 41" E, 814.41 FEET ALONG THE NORTHERLY LINE OF SAID SOUTH HALF AND ALONG THE SOUTHERLY RIGHT OF WAY LINE OF OCEANSIDE BOULEVARD TO THE TRUE POINT OF BEGINNING; THENCE LEAVING SAID NORTHERLY LINE OF SAID SOUTH HALF AND SAID SOUTHERLY RIGHT OF WAY LINE OF OCEANSIDE BOULEVARD, S 00° 51′ 19" W, 208.91 FEET; THENCE N 85° 07′ 11" E, 572.55 FEET TO THE TERMINUS OF THE EASEMENT.

APN: 162-050-48-00 (new APN, not currently assessed)

NOTICE OF EXEMPTION
City of Oceanside, California

Post Date:
Removal:
(180 days)

1. **APPLICANT:** Premiere Patio Heating Specialists, LLC.
2. **ADDRESS:** P.O. Box 6470, Oceanside CA. 92056
3. **PHONE NUMBER:** (760) 692-1924 Applicant (Ann Gunter)
4. **LEAD AGENCY:** City of Oceanside
5. **PROJECT MGR.:** Scott Nightingale, Planner II
6. **PROJECT TITLE:** CUP14-00010, Premier Patio Propane

7. DESCRIPTION: A Conditional Use Permit (CUP14-00010) to allow the installation and use of two (2) 30,000-gallon above ground and outdoor propane storage tanks. Pursuant to Zoning Ordinance Section 3026 (Hazardous Material Storage), the handling and use of hazardous materials in quantities with capacity greater than 500-gallons are subject to review and approval of a Conditional Use Permit. The measurement of the proposed tanks is approximately 60-feet in width and 9.6-feet in diameter. The tanks would be placed on skids with at least a 10-foot separation between tanks and a 50-foot setback from property lines. A 30-foot buffer from any vegetation area is required, as per the Oceanside Fire Department requirements, and this is met with the established 50-foot rear setback. The two (2) new tanks would sit at a maximum height of 10.5-feet and would be situated at the south west corner of the site. Both tanks would be screened from public view by the existing vegetation around the property. The proposal for two (2) 30,000-gallon above ground propane storage tanks would allow the Premier Patio Heating Specialist business to minimize any variations in supply, and continue to provide propane services to customers.

All hazardous materials will be stored and handled in accordance with the City of Oceanside Fire Department requirements and the County Department of Environmental Health regulations.
The project site has an underlying General Plan land use designation of General Industrial (GI) and a Zoning designation of General Industrial (IG).

ADMINISTRATIVE DETERMINATION: Planning Division staff has completed a preliminary review of this project in accordance with the California Environmental Quality Act (CEQA) and staff has determined that further environmental evaluation is not required because:

[x] The project qualifies for a Class 32 categorical exemption under Section 15332 "In-Fill Development Projects;"

[ ] "The activity is covered by the general rule that CEQA applies only to projects which have the potential for causing a significant effect on the environment. Where it can be seen with certainty that there is no possibility that the activity in question may have a significant effect on the environment, the activity is not subject to CEQA" (Section 15061(b)(3)); or,

[ ] The project is statutorily exempt, Section, ____ (Sections 15260-15277); or,

[ ] The project does not constitute a "project" as defined by CEQA (Section 15378).

Scott Nightingale, Planner II

Date: December 15, 2014

cc: [x] Project file
$50.00 Admin. Fee

[x] Counter file

[x] Library Posting:

[ ] County Clerk